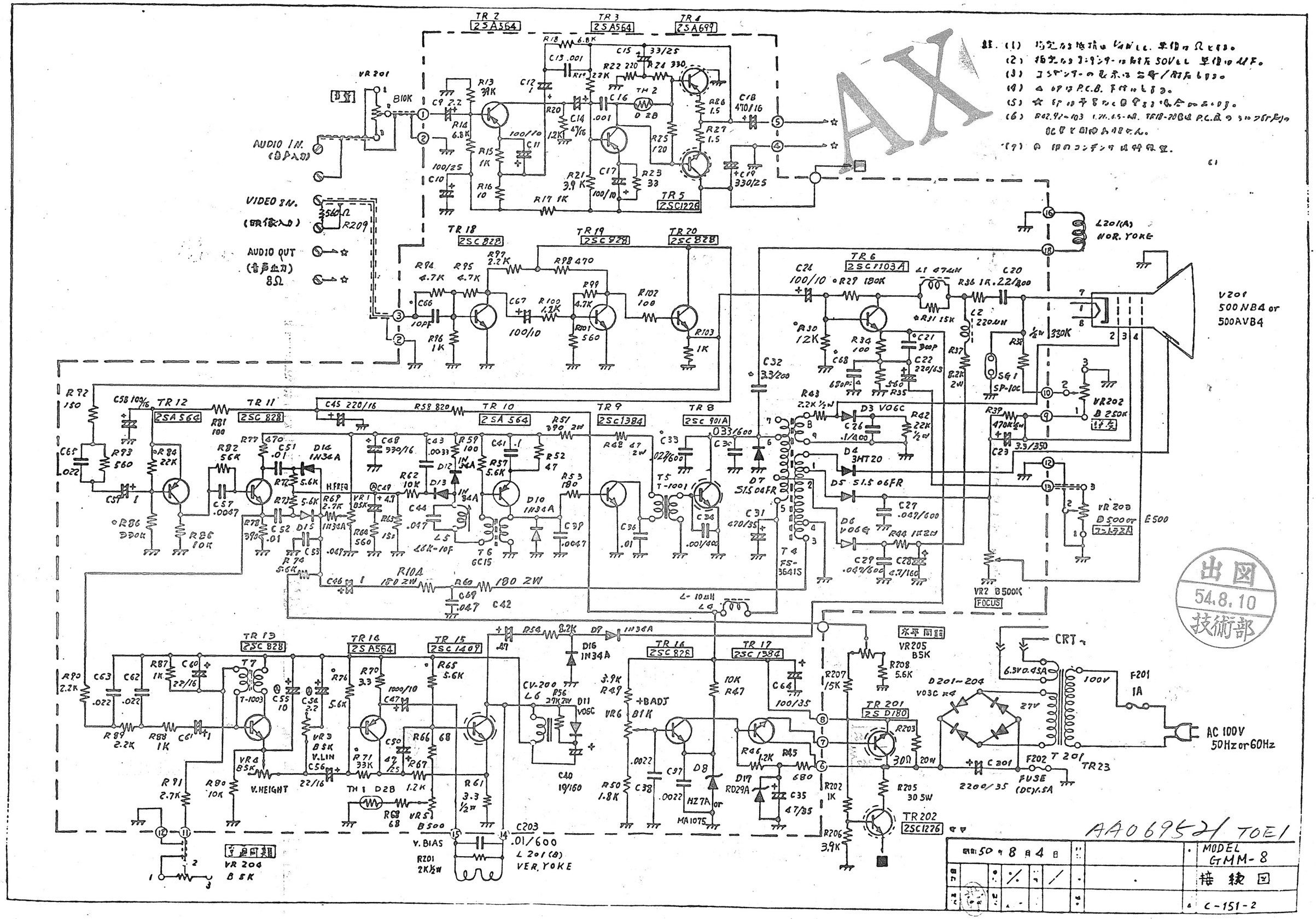
TR 2 2SA564
TR 3 2SA564
TR 4 2SA699
TR 5 2SC1226
TR 6 2SC1103A
TR 8 2SC 901A
TR 9 2SC1384
TR 10 2SA 564
TR 11 2SC 828
TR 12 2SA 564
TR 13 2SC 828
TR 14 2SA564
TR 15 2SC 1409
TR 16 2SC 828
TR 17 2SC 1384
TR 18 2SC 828
TR 19 2SC 828
TR 20 2SC 828
TR 201 2SD180
TR 202 2SC1226
TR23
VR 201 B10K
AUDIO IN.
VIDEO IN.
AUDIO OUT
8Ω
L201(A) NOR. YOKE
V201 500NB4 or 500AVB4
VR202 B 250K
VR 203 B 500K E500
VR2 B500K FOCUS
VR 204 B 5K
VR3 B5K V.LIN
VR4 B5K V.HEIGHT
VR5 B500 V.BIAS
VR201 2K½W
L201(B) VER. YOKE
T5 T-1001
T4 FS-3641S
T6 6C15
T7 T-1003
T 201
CRT
6.3V0.45A
100V
F201 1A
AC 100V 50Hz or 60Hz
F202 FUSE (DC)1.5A
D201-204 V03C ×4
27V
D3 V06C
D4 3HT20
D5 S1.5 06FR
D6 V06C
D7 S1.5 06FR
D8 HZ7A or MA1075
D17 RD29A
D11 V06C
D16 1N34A
D10 1N34A
D14 1N34A
D15 1N34A
D12 1N34A
D13 1N34A
D9 1N34A
SG1 SP-10C
L4 10μH
L5 26K-10F
L6 CV-200
L1 47μH
L2 220μH
TH 1 D2B
TH 2 D 2B
H.FREQ
C203 .01/600
R10A 180 2W
R60 180 2W
R54 8.2K
R56 27K 2W
R 61 3.3 ½W
R 91 2.7K
R 80 10K
R 90 2.2K
R 86 10K
R 86 330K
R 84 22K
R 92 150
R 93 560
R 77 470
R 82 56K
R 78 390
R 74 5.6K
R 71 33K
R 70 3.3
R 76 5.6K
R 65 5.6K
R 66 68
R 67 1.2K
R 68 68
R 69 2.7K
R 64 560
R 63 15Ω
R 62 10K
R 59 100
R 57 5.6K
R 52 47
R 53 180
R 51 390 2W
R 58 820
R 68 47 2W
R 49 3.9K
R 50 1.8K
R 47 10K
R 46 1.2K
R 45 680
R 44 1K 2W
R 43 2.2K ½W
R 42 22K ½W
R 37 8.2K 2W
R 36 1K
R 34 100
R 31 15K
R 30 12K
R 29 180K
R 25 120
R 23 33
R 22 220
R 24 330
R 21 3.9K
R 20 12K
R 19 22K
R 18 6.8K
R 14 6.8K
R 13 39K
R 15 1K
R 16 10
R 17 1K
R 99 4.7K
R 98 470
R 95 4.7K
R 94 4.7K
R 96 1K
R 100 1.2K
R 101 560
R 102 100
R 103 1K
R 201 560
R 203 30Ω 20W
R 205 30 5W
R 202 1K
R 206 3.9K
R 207 15K
R 208 5.6K
R 209 560Ω
R 39 330K ½W
R 38 470K ½W
R 35 560
C 26 .1/400
C 27 .047/600
C 29 .047/600
C 28 4.7/160
C 30 .022/600
C 31 470/35
C 32 3.3/200
C 33 .022/600
C 34 .001/400
C 36 .01
C 37 .047
C 38 .0022
C 39 .0047
C 40 10/160
C 41 .1
C 42 .047
C 43 .0033
C 44 .047
C 45 220/16
C 46 1
C 47 47/25
C 48 330/16
C 49 4.7
C 50 47/25
C 51 .01
C 52 .01
C 53 .047
C 54 2.2
C 55 10
C 56 22/16
C 57 .0047
C 58 10/16
C 59 100
C 60 22/16
C 61 1
C 62 .022
C 63 .022
C 64 100/35
C 65 .022
C 67 100/10
C 68 680P
C 69 .047
C 66 10PF
C 9 2.2
C 10 100/25
C 11 100/10
C 12 1
C 13 .001
C 14 .001
C 15 33/25
C 16 .001
C 17 100/10
C 18 470/16
C 19 330/25
C 20 22/400
C 21 300P
C 22 220/63
C 23 3.3/350
C 24 100/10
C 35 47/35
C 201 2200/35
VR 204 B 5K
VR 205 B5K
VR 209 B 500K E500
VR 1 B5K
VR 2 B500K
VR 3 B5K
VR 4 B5K
VR 5 B500
VR 201 B 500K
VR 202 B 250K
VR 203 B 500K
VR 204 B 5K
VR 205 B5K
AA06952/TOEI
出図 54.8.10 技術部
昭50年8月4日
MODEL GMM-8
接続図
C-151-2