namco® America Inc.

Kit Installation and Operation Manual

Important

Read PRECAUTIONS and INSTALLATION Sections before operating game

FCC Notice

Note: This equipment has been tested and found to comply with the limits for a Class A digital device, pursuant to Part 15 of the FCC Rules. These limits are designed to provide reasonable protection against harmful interference when the equipment is operating in a commercial environment. This equipment uses, and can radiate radio frequency energy and, if not installed and used in accordance with the instruction manual, may cause harmful interference to radio communications. Operation of this equipment in a residential area is likely to cause harmful interference in which case the user will be required to correct the interference at his own expense.

Copyright 1997 NAMCO AMERICA INC. - All rights reserved

No part of this publication may be reproduced by any mechanical, photographic, or electronic process, or in the form of a phonographic recording, nor may it be stored in a retrieval system, transmitted, or otherwise copied for public or private use, without permission from NAMCO AMERICA INC.

TABLE OF CONTENTS

1.0 SPECIFICATIONS 1
2.0 INTRODUCTION 2
2.1 Game Conversion Overview 2
2.2 Maximizing Earnings 2
3.0 INSTALLATION 3
3.1 Precautions 3
3.2 Cabinet Preparation 4
3.3 Game Installation 4
4.0 SET-UP AND TEST 6
4.1 Test Mode 6
4.2 Test Mode Procedure 6
4.3 TEST Menu 6
4.3.1 DISPLAY TEST 7
4.3.1.1 Color Edit 7
4.3.1.2 DIAGONAL Test Pattern 8
4.3.1.3 COLOR BAR Test Pattern 9
4.3.1.4 CONVERGENCE Test Pattern 10
4.3.2 SWITCH TEST 11
4.3.3 SOUND TEST 12
4.3.4 JVS CABINET OPTIONS 12
4.3.5 GAME OPTIONS 13
4.3.6 COIN OPTIONS 14
4.3.7 A.D.S. 15
4.3.8 DATA CLEAR 15
4.3.9 EXIT & SAVE 15
5.0 PCB CONNECTOR TABLES 16
5.1 JAMMA Edge Connector 16
5.2 Extended Edge Connector 17
TEKKEN 3 Decals, Typical Installation
Control Panel Button Layout Drawing
TEKKEN 3 Wiring Diagram

1.0 SPECIFICATIONS

Conversion Game Requirements

Power Supply: 150 Watt computer-grade,
+5 VDC +5% -1%, 5 Amp Minimum
+12 VDC +/- 5%, 2 Amp Minimum

Harnesses: 56 pin JAMMA-type, key installed at pins H & 7
48 pin extension, key installed at pins A5 & B5
(both harnesses are supplied with the Kit)

Monitor: Horizontally mounted
Scanning retrace: interlace or non-interlace (selectable)
Horizontal sync frequency: 15.75 kHz
Vertical sync frequency: 60 Hz

Kit Contents [P/N T301-06562-00]

P/N	Description	#	P/N	Description	#
T303-06565-00	PCB, Tekken 3, w/48P Conn.	1	T340-06550-00	Decal, Side Panel, Lower Left	1
SK47-00145-00	FCC Foil shield	1	T340-06550-01	Decal, Side Panel, Lower RT	1
VG20-01370-00	PCB Mounting Feet	4	T340-06551-00	Card, Game Instructions	1
TK50-03333-00	Harness, JAMMA 56P Kit	1	T340-06552-00	Card, Move List	1
VG78-05265-00	ASSY, Hsng and Ferrite Bead	2	T340-06553-00	Decal, Marquee	1
VG80-06575-00	Pushbutton w/microsw 1P WT	1	VG40-06560-00	Decal, Animated Violence	1
VG80-06576-00	Pushbutton w/microsw 2P WT	1	T340-06555-00	Decal, Punch Label	2
VG80-06577-00	Pushbutton w/microsw RED	4	T340-06556-00	Decal, Kick Label	2
VG80-06578-00	Pushbutton w/microsw YLW	4	T340-06557-00	Decal, Player 1	1
VG80-03212-00	Joystick, 8-way Super BK	2	T340-06558-00	Decal, Player 2	1
T390-06561-00	Cover, Control Panel, Overlay	1	T340-06559-00	Decal, Tekken 3, Logo	2
T340-06554-00	Decal, Control Panel Overlay	1	VG46-02653-00	Label, FCC	1

! IMPORTANT NOTE !
The 48-pin connector supplied with the TEKKEN 3 Kit has a small pitch or distance between connection pads.
DO NOT SUBSTITUTE OTHER 48 PIN CONNECTORS.

Note: *Specifications are subject to change without prior notice. Modification and/or alteration of the Tekken 3 game kit with kits or parts not supplied by NAMCO may void the warranty.*

3.0 INSTALLATION

Note: Shipping damage may void the warranty. In case of shipping damage, contact your distributor and the transportation carrier immediately.

CAUTION

The electronic installation should be performed by experienced Game technicians only. Existing game wiring must be made compatible with the enclosed JAMMA wire list. Wiring should be completely checked and double-checked for continuity and shorts prior to application of power to the game PCB. Damage caused by faulty wiring will void the warranty.

Before beginning the installation, verify that the kit contents match the enclosed kit parts list.

3.1 Precautions

1. Turn power to the cabinet off before installing or removing any electronic components.
2. The TEKKEN 3 PCB is a state of the art custom polygon graphics system that is very sensitive to electro-static discharge (ESD). Be sure to use appropriate ESD reduction procedures such as use of ground straps and handling the PCB using the anti-static material provided.
3. Dust or foreign matter may cause PCB failure. Dust can be removed using canned compressed air available at electronics supply stores. Turn the power off before cleaning the PCB.
4. The TEKKEN 3 PCB can be damaged by even the small internal voltage of a multimeter. Never attempt to troubleshoot the PCB with such instruments. In the event of a PCB failure please contact your distributor for factory repairs.
5. If the game PCB must be returned for repairs, wrap it in a suitable anti-static foam or bubble wrap, include a note indicating the nature of the trouble(s), and label the return carton with the RMA number obtained through your distributor.
6. If measurements must be taken while the system is operational, use extreme care to prevent contact with exposed AC or high-voltage monitor components.

2. Mount the game PCB to the inside of the game cabinet, such that there is adequate ventilation provided for the PCB heat sink and that clearance is provided for the EMI Shield Box. Verify that the 56-pin JAMMA harness is equipped with the 2 ferrite-core elements (provided with the kit harness). When the installation is completed, these ferrite elements should be located within a few inches of the EMI Shield Box.
3. Place the 56-pin and 48-pin wire harnesses in the cabinet, making sure there is adequate length for service loops.
4. Make the appropriate connections to the power supply. Do not turn on power yet.
5. Connect the monitor.
6. Connect the coin door and the coin meter.
7. Connect the test/service panel.
8. Connect the speakers to the wire harness. If optional volume potentiometers are to be used, wire in accordance with the enclosed TEKKEN 3 Wiring Diagram [T350-06581-00].
9. On the control panel, locate the joystick and push-button holes as shown in the enclosed layout drawing. *Be sure to check the clearance for the push buttons and joysticks under the control panel before punching the holes.*
10. Install the TEKKEN 3 control panel decal and overlay provided in the kit. Using the control panel cutouts as a guide, trim the overlay to fit. Apply the Kick, Punch and Player 1 & 2 labels provided with the kit.
11. Install and connect the push button switches.
12. Install and connect the joysticks.
13. Install the control panel on the cabinet and connect the control panel wire harness to the game wire harness.
14. Use the TEKKEN 3 Wiring Diagram as a guide to verify system connections prior to turning on the power. Tie off any unused wires.
15. Install the cabinet side graphics provided. Float the graphics on by applying a spray of general purpose cleaner to the side wall. Smooth out the bubbles and liquid with a paint squeegee. Wipe the side decal dry with a soft cloth. Repeat for the opposite side.
16. Install the marquee overlay provided in the kit in place of the existing marquee.
17. Install the game play and game moves instruction cards provided with the kit.
18. If needed, trim the graphics to fit the particular cabinet.
19. Turn on the system power. Adjust system settings in TEST mode.

4.3.1 DISPLAY TEST

4.3.1.1 Color Edit

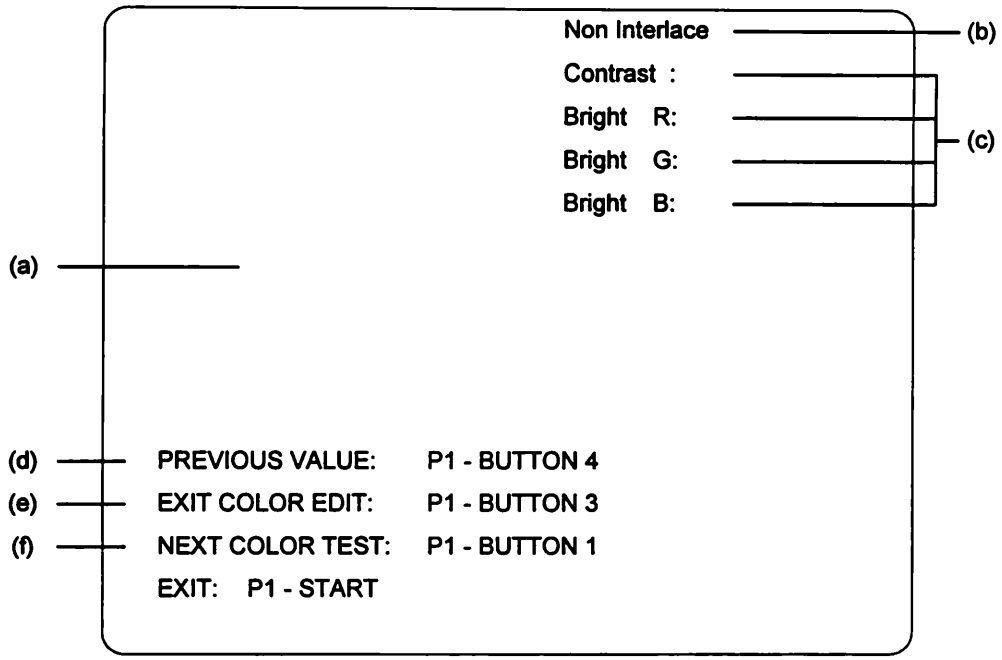

a) Upon entering the DISPLAY TEST, the Color Edit screen data appears superimposed upon the DIAGONAL screen. Color Edit mode can be entered/exited from either of the 3 test pattern screens: DIAGONAL, COLOR BAR, or CONVERGENCE. Color Edit provides a means for adjusting the overall contrast and for balancing the brightness of the R, G, B signals. To select an item to be changed, move the P1 joystick up/down; to change the item setting, move the joystick right/left.

b) Interlace or non-interlace scanning can be selected depending on the type of monitor used. Non-interlace will be suitable for the majority of game monitors. If excessive jitter is present, switch the scanning mode.

c) Adjust contrast and brightness levels in accordance with preferences or standards. Before proceeding, it is best to verify that the monitor itself is in proper adjustment and that its screen has been degaussed.

Item	Range	Default
Contrast	00 - FF	A0
Bright R	00 - FF	18
Bright G	00 - FF	18
Bright B	00 - FF	18

d) Press P1-BUTTON 4 to negate any changes.

e) To remove the Color Edit data from the test pattern, press P1 - BUTTON 3.

f) To proceed to the next test pattern, press P1 - BUTTON 1.

4.3.1.3 COLOR BAR Test Pattern

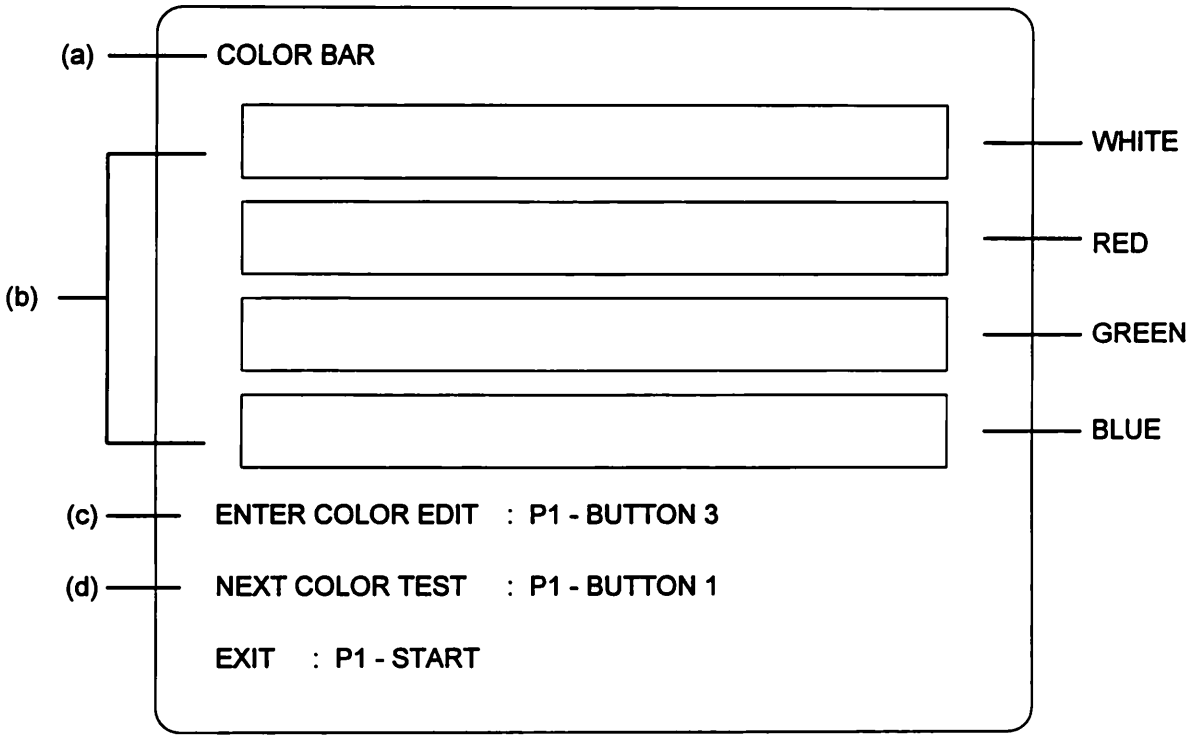

a) The Color Bar test pattern can be used to check brightness, contrast and discrimination of the main colors.

b) The default color bars are displayed in 32 brightness gradations. By pressing P1-BUTTON 2 (right Punch), colors bars of 16, 8, 4, and 2 gradations can be displayed.

c) The Color Edit adjustment screen can be called up by pressing P1-BUTTON 3.

d) Press P1-BUTTON 1 to switch to the CONVERGENCE test pattern.

4.3.2 SWITCH TEST

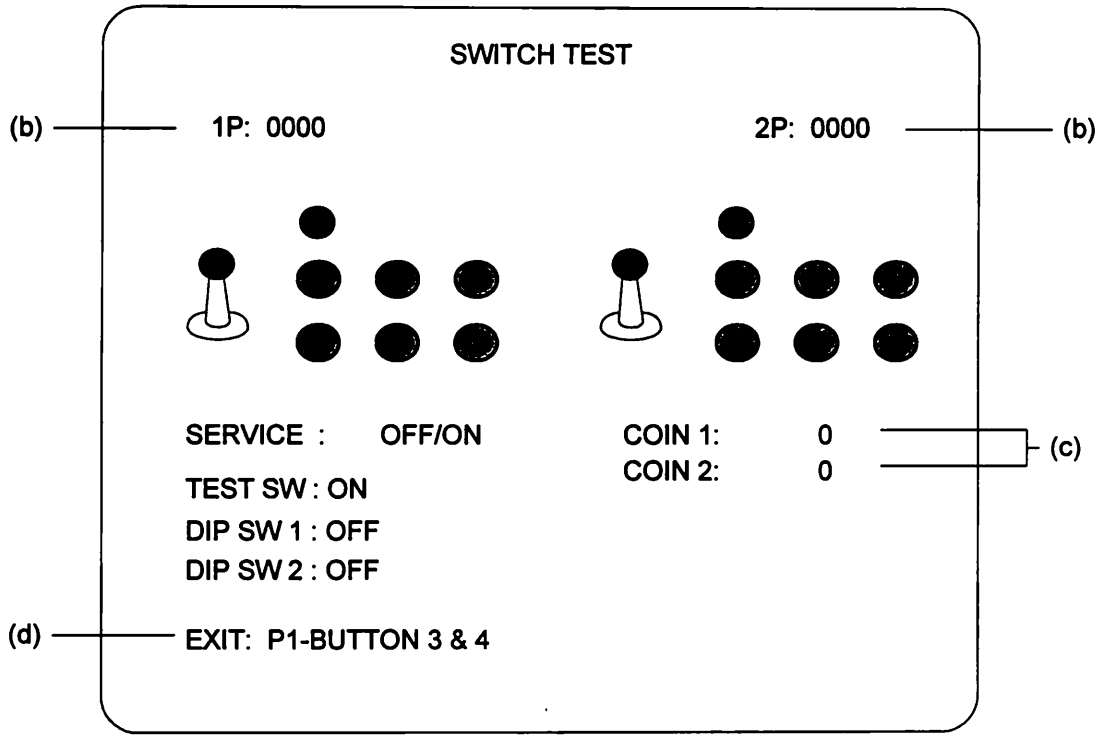

Notes:

a) Active switches are highlighted in red.

b) Switch format for both 1P and 2P is: P : n1 n2 n3 n4.

n1 →	0 = default, 1 = Joystick down, 2 = Joystick up, 8 = P-Start
n2 →	0 = default, 1 = SW 2 Punch (R), 2 = SW 1 Punch (L), 4 = Joystick (R), 8 = Joystick (L)
n3 →	0 = default, 2 = Kick (R), 4 = Kick (L)
n4 →	0 = default

c) Coin switch value increments 1 for each coin. Range: 0 to 999.

d) Exit to the main test menu by pressing P1-BUTTONS 3 and 4 simultaneously.

4.3.5 GAME OPTIONS

GAME OPTIONS
<DEFAULTS IN GREEN>

DIFFICULTY LEVEL : HARD (a)
FIGHT COUNT <1P GAME> : 2 (b)
FIGHT COUNT <VS GAME> : 2 (c)
LIFE BAR <1P GAME> : -1 (d)
LIFE BAR <VS GAME> : NORMAL (e)
GUARD DAMAGE : OFF (f)
NEUTRAL GUARD : ON (g)
ROUND TIME : 40 SEC (h)

CHARACTER CHANGE AT CONTINUE : YES (i)
CHARACTER CHANGE AT VS GAME : YES (j)

MUSIC IN ATTRACT : YES (k)
EVENT MODE : OFF (l)
HIT COLOR : GREEN (m)

EXIT : P1 - START

Values shown above are Default settings.

(a) DIFFICULTY LEVEL is the overall difficulty level of the game.
Range: EASY, MEDIUM, HARD, VERY HARD, ULTRA HARD
(b) FIGHT COUNT <1P GAME> is the number of rounds required for victory in the 1P game.
Range: 1-5
(c) FIGHT COUNT <VS GAME> is the number of rounds required for victory in the VS game.
Range: 1-5
(d) LIFE BAR <1P GAME> is the life gauge during the 1P game.
Range: -2, -1, NORMAL, +1, +2
(e) LIFE BAR <VS GAME> is the life gauge during the VS game.
Range: -2, -1, NORMAL, +1, +2
(f) GUARD DAMAGE is the damage inflicted on the guard.
Range: ON (slight damage), OFF (no damage)
(g) NEUTRAL GUARD is the guard under conditions of inactive joystick.
Range: ON, OFF
(h) ROUND TIME is the time allotted for 1 round.
Range: 20, 30, 40, 50, 60 seconds
(I) CHARACTER CHANGE AT CONTINUE allows a new character to appear in Continue mode.
Range: ON, OFF
(j) CHARACTER CHANGE AT VS GAME provides a new character for the player being challenged.
Range: ON, OFF
(k) MUSIC IN ATTRACT allows the sound to be turned on or off during attract mode.
Range: ON, OFF
(l) EVENT MODE controls what happens at the end of game play.
Range: ON (game is over for both players), OFF (if 1P, the winner continues)
(m) HIT COLOR controls the color emitted during a hit.
Range: RED, GREEN

4.3.7 A.D.S.

This mode provides data on play time in each mode, coin totals, character selection percentages, and VS game win/loss.

To select the display screen, press P1 - BUTTON 1.

To return to the main test menu, press the P1 - START switch.

4.3.8 DATA CLEAR

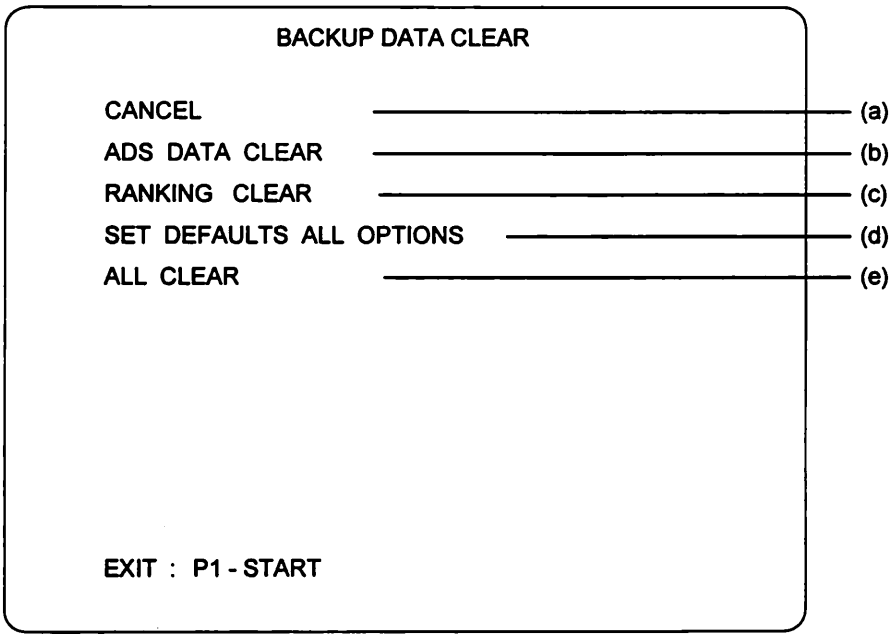

a) CANCEL returns to the main test menu screen.

b) DATA CLEAR effects the A.D.S. data only.

c) RANKING CLEAR initializes the ranking data to the factory default values.

d) SET DEFAULTS ALL OPTIONS initializes all game options to their default values.

e) ALL CLEAR performs both functions (b) and (c).

4.3.9 EXIT & SAVE

This mode allows a return to the game screen following completion of option adjustments.

EXIT & SAVE must be selected for changes to register.

Note: turn off the TEST *switch following return to the game screen.*

5.2 Extended Edge Connector

(48 Pin 2.54 mm pitch 225D-10024C2-2312 or equivalent)

Solder side	Terminal No.		Parts side
Speaker R (-)	A1	B1	Speaker R (+)
	A2	B2	
	A3	B3	
	A4	B4	
key	A5	B5	Insertion error preventing key
	A6	B6	
	A7	B7	
2P Kick button 3	A8	B8	2P kick button 4
	A9	B9	
	A10	B10	
	A11	B11	
	A12	B12	
	A13	B13	
	A14	B14	
	A15	B15	
	A16	B16	
	A17	B17	
	A18	B18	
	A19	B19	1P Kick button 4
1P Kick button 3	A20	B20	
	A21	B21	
	A22	B22	
	A23	B23	
	A24	B24	

Notes:
- Do not connect leads to blank pins.
- For Stereo and Mono setting select the speaker output in the SOUND TEST screen in test mode.
- Monophonic cabinets output only left channel sound when the stereo sound setting is selected.

Speaker connections
- Connect the (L) speaker to the speaker output of 56 Pin JAMMA edge connector.
- Connect the Right speaker to the speaker output of the 48 Pin edge connector.

TEKKEN 3, Kit Decals, Typical Installation

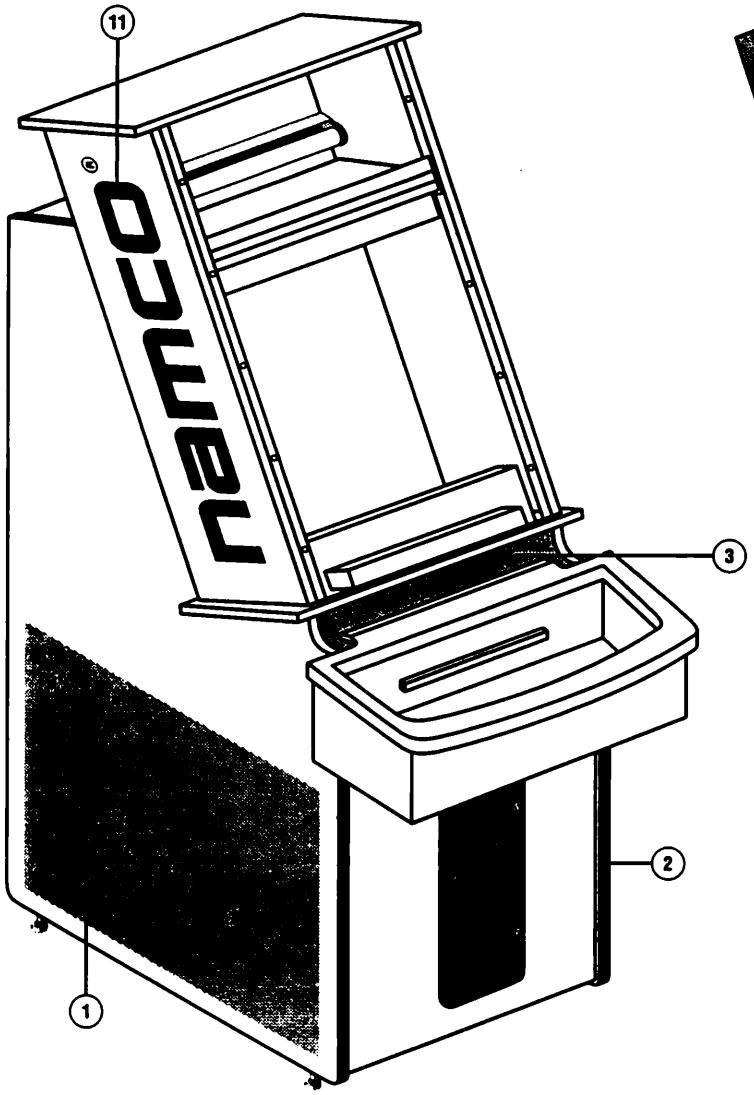

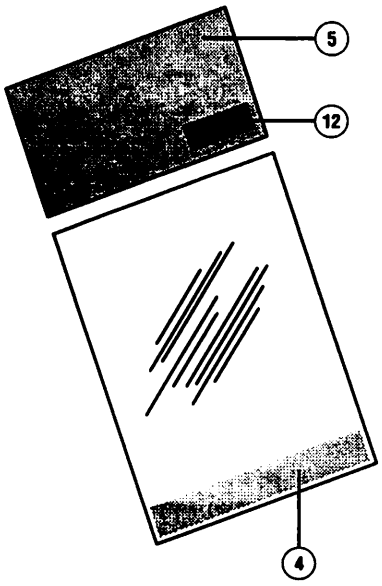

ITEM	PART NO.	DESCRIPTION	QTY
1	*T340-06550-00*	*Decal, Side Panel, Lower, Left*	1
2	*T340-06550-01*	*Decal, Side Panel, Lower, Right*	1
3	**T340-06551-00**	**Card, Game Instructions**	1
4	**T340-06552-00**	**Card, Move List**	1
5	*T340-06553-00*	*Decal, Marquee*	1
6	*T340-06554-00*	*Decal, Control Panel Overlay*	1
7	*T340-06555-00*	*Decal, Punch Label*	2
8	*T340-06556-00*	*Decal, Kick Label*	2
9	*T340-06557-00*	*Decal, Player 1*	1
10	*T340-06558-00*	*Decal, Player 2*	1
11	*TK40-03363-00*	*Decal, Side Panel, NAMCO Logo*	2
12	*VG40-06560-00*	*Decal, Animated Violence*	1

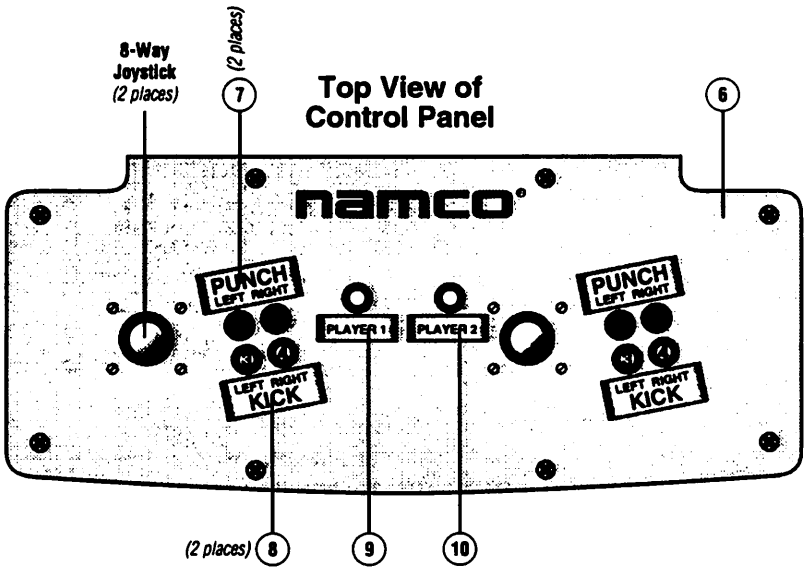

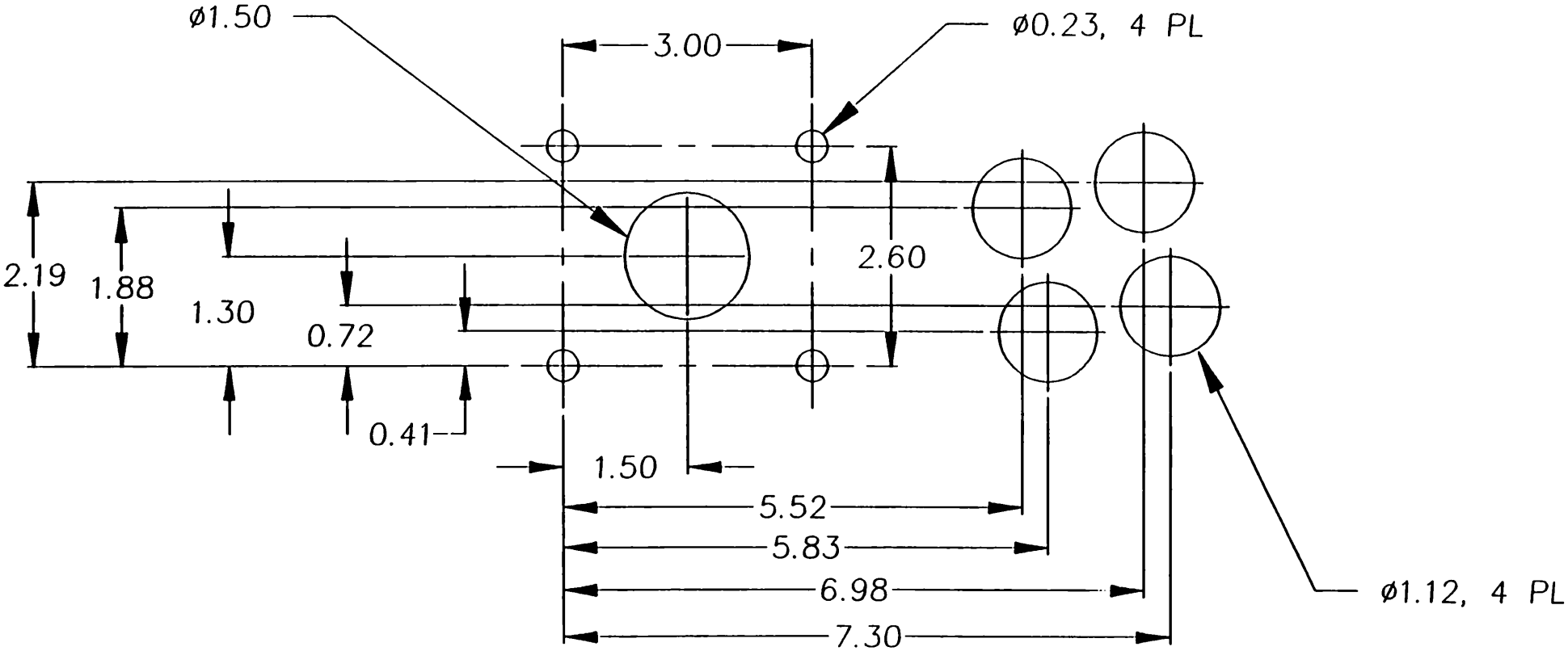
ø1.50
3.00
ø0.23, 4 PL
2.19
1.88
1.30
0.72
0.41
2.60
1.50
5.52
5.83
6.98
7.30
ø1.12, 4 PL

NOTES
1. APPLY 18AWG FOR THICK LINES AND 22AWG FOR THIN LINES
2. (S) INDICATES RING TERMINAL
3. LABELS ARE APPLIED TO BOTH SIDES OF 56 PIN CONNECTOR
4. KEYS ARE APPLIED ON BOTH 56 AND 48 PIN CONNECTORS

REVISION			
REV	DESCRIPTION	DATE	APPROVAL
A	PROD. RELEASE	1/28/97	

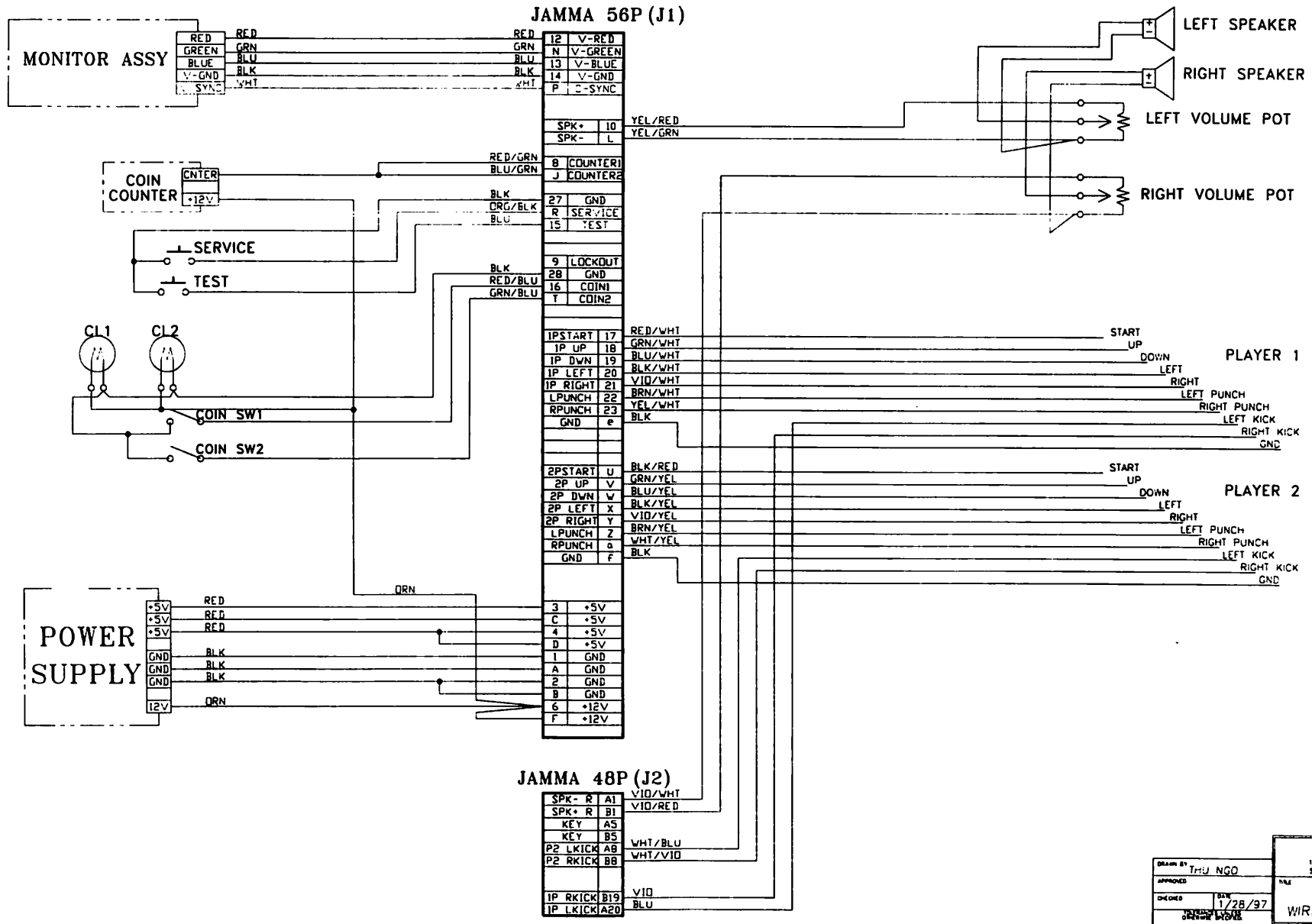

DRAWN BY THU NGO	namco 150 Charcot Avenue San Jose, CA 95131
APPROVED	TITLE TEKKEN 3 WIRING DIAGRAM
CHECKED	DATE 1/28/97
USED ON TEKKEN 3	SIZE D · DRAWING NO T350-06581-00 · REV A
	DO NOT SCALE · SHT 1 OF 1

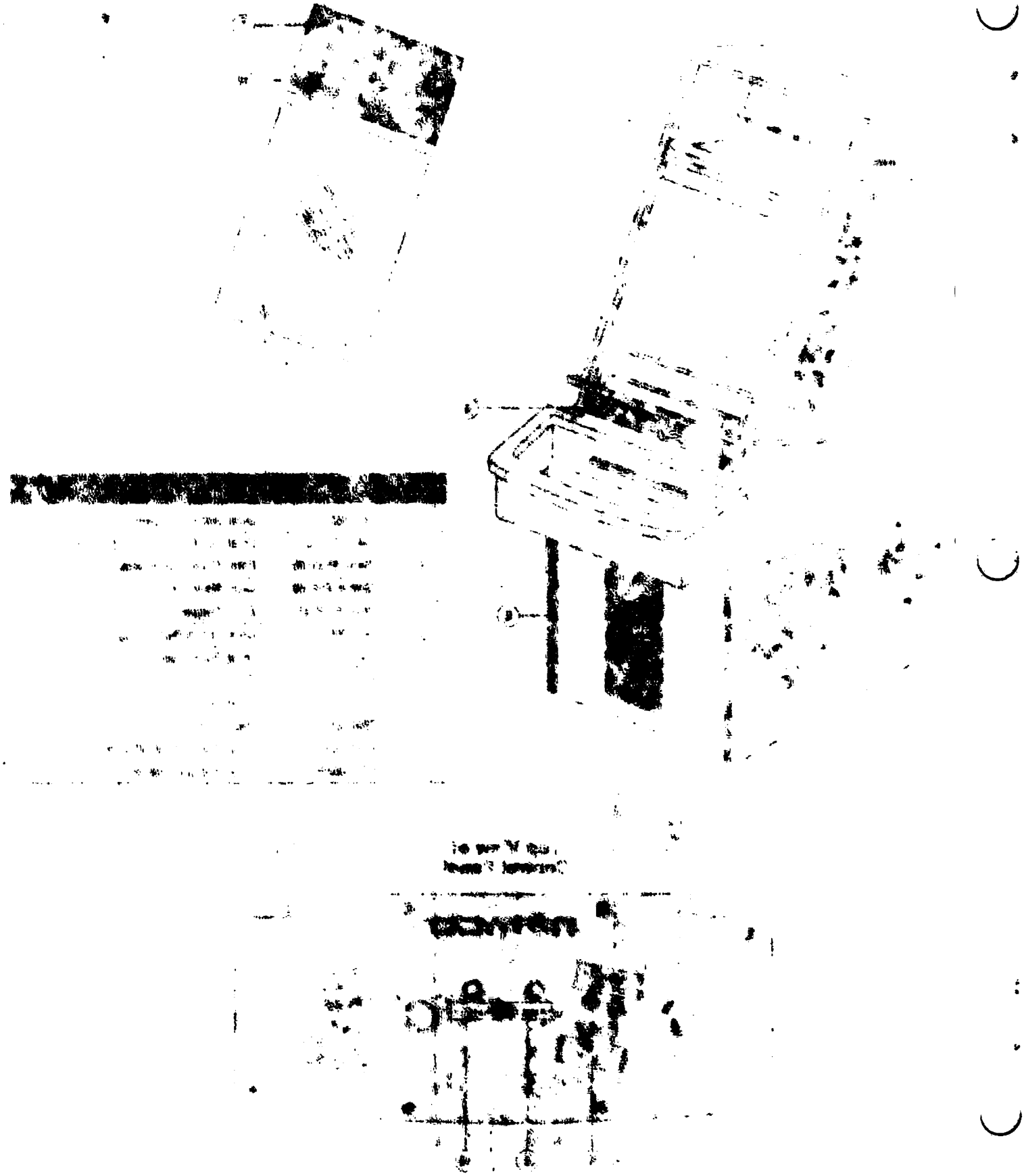

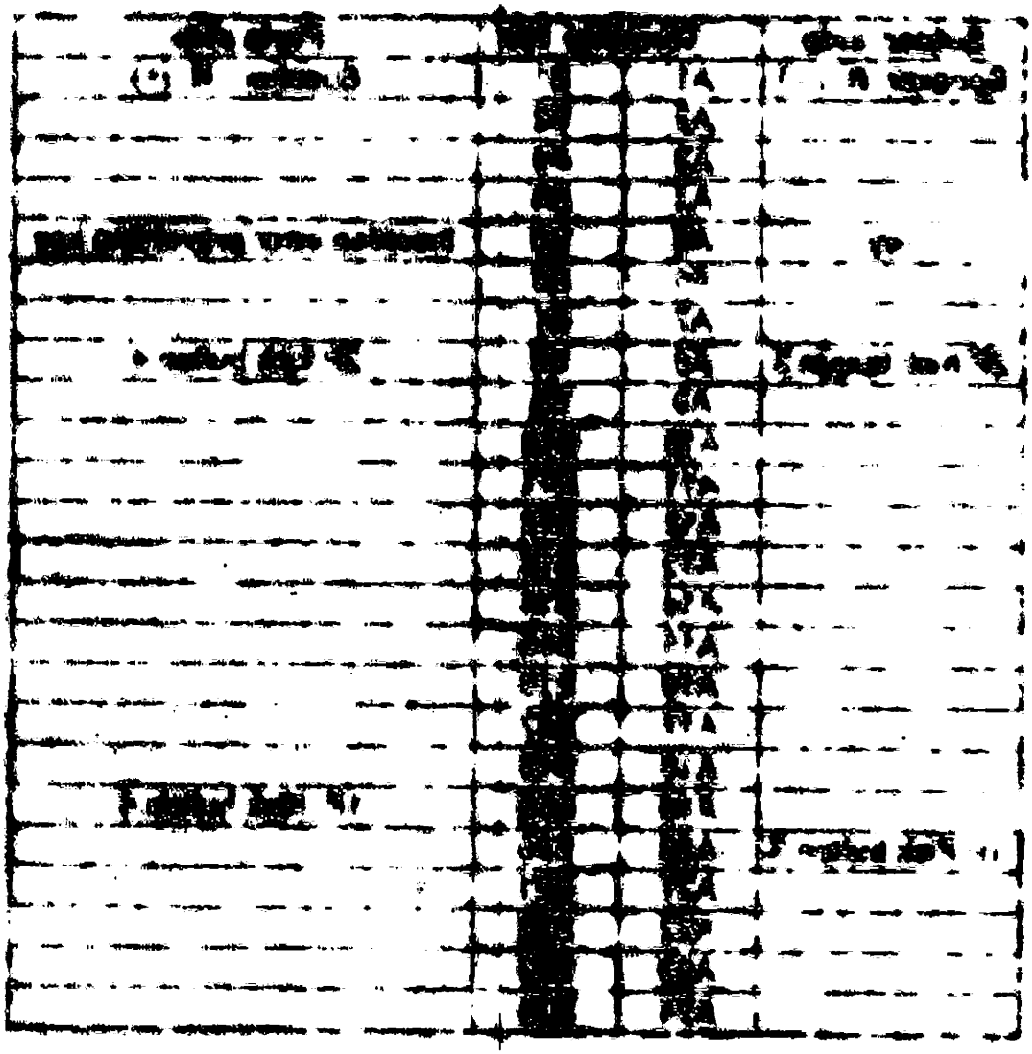

5.0 PCB CONNECTOR TABLES

5.1 JAMMA Edge Connector
(56 Pin 3.96 mm pitch)

Solder side	Terminal	No.	Parts side
GND	A	1	GND
GND	B	2	GND
+5V	C	3	+5 V
+5 V	D	4	+5 V
	E	5	
+12 V	F	6	+12 V
Insertion error preventing	H	7	Insertion error preventing
Coin counter 2	J	8	Coin counter 1
	K	9	
Speaker (-)	L	10	Speaker(+)
Audio GND	M	11	Audio (+)
Video GREEN	N	12	Video RED
Video SYNC	P	13	Video BLUE
Service Switch	R	14	Video GND
	S	15	Test switch
Coin switch 2	T	16	Coin switch 1
2P start switch	U	17	1P start switch
2P lever UP	V	18	1P lever UP
2P lever DOWN	W	19	1P lever DOWN
2P lever LEFT	X	20	1P lever LEFT
2P lever RIGHT	Y	21	1P lever RIGHT
2P Punch button 1	Z	22	1P Punch button 1
2P Punch button 2	a	23	1P Punch button 2
	b	24	
	c	25	
	d	26	
GND	e	27	GND
GND	f	28	GND

Notes:
- Do not connect leads to blank pins.
- The coin counter(s) operate on +12 volts
- Connect the switches to N.O. terminals and the GND to the COM terminal
- The +5V 5A and +12 V 2A supplies must be within +5% and -1% of nominal voltage.

4.3.6 COIN OPTIONS

```
                    COIN OPTIONS
                <DEFAULTS IN GREEN>
START COST :
    2 COIN TO START                          (a)
CONTINUE COST :
    2 COIN TO CONTINUE                       (b)
COIN CHUTE 1 MECHANICAL VALUE :
    1 COIN COUNT AS 1 COIN                   (c)
COIN CHUTE 2 MECHANICAL VALUE :
    1 COIN COUNT AS 1 COIN                   (d)
CREDIT MODE :
    COMMON                                   (e)
COIN COUNTER :
    1 COUNTER                                (f)
FREE PLAY :
    NO                                       (g)

      EXIT :  P1 - START
```

(a) START COST range is 1-9 COINS. Default: 1.

(b) CONTINUE COST range is 1-9 COINS, and must be less than or equal to (a). Default: 1.

(c) & (d) COIN CHUTE 1 & 2 MECHANICAL VALUE is the value of each pulse from either coin switch 1 or 2, respectively. Range: 1 COIN COUNT AS (1-9) COIN. Default:1.

(e) CREDIT MODE can be either COMMON or EACH ONE, depending on the wiring of the coin switches. If the switches are wired in parallel, select COMMON. If Player 1 and Player 2 are to be credited separately, select EACH ONE.

(f) COIN COUNTER can be adjusted for either parallel coin switches (1 COUNTER), or for a Player 1 and Player 2 configuration (2 COUNTER).

(g) FREE PLAY is either YES or NO. If YES is selected, all COIN OPTION changes are locked-out.

4.3.3 SOUND TEST

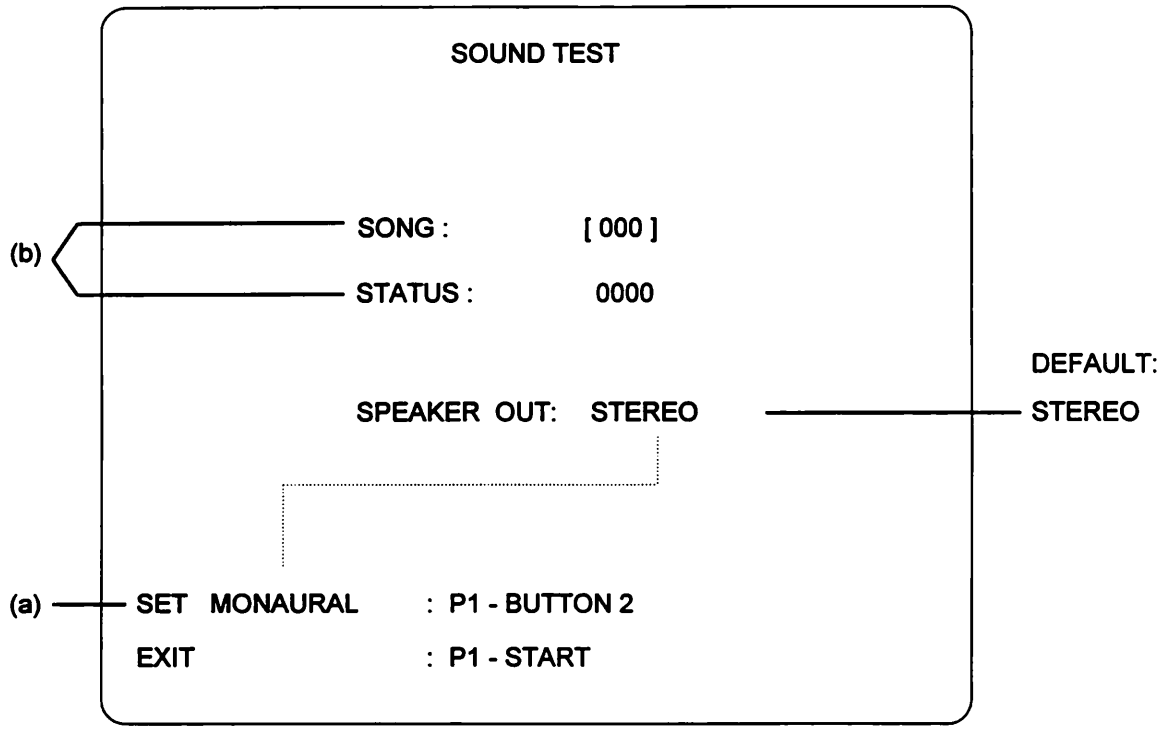

Notes:

a) Press P1-BUTTON 2 (right Punch) to toggle between mono and stereo modes.

b) Use the P1 Joystick (right) to increment the SONG count. Use the Joystick (left) to decrement the count. Press P1-BUTTON 1 (left Punch) to test the item. While the test is active, STATUS 800X is displayed, where X is the SONG count.

c) SONG 001 is the stereo output check.

d) To adjust the audio volume, use either the volume control dial on the game PCB, or the external volume control potentiometers.

4.3.4 JVS CABINET OPTIONS

This item cannot be selected if the cabinet is wired as described using the JAMMA connectors.

4.3.1.4 CONVERGENCE Test Pattern

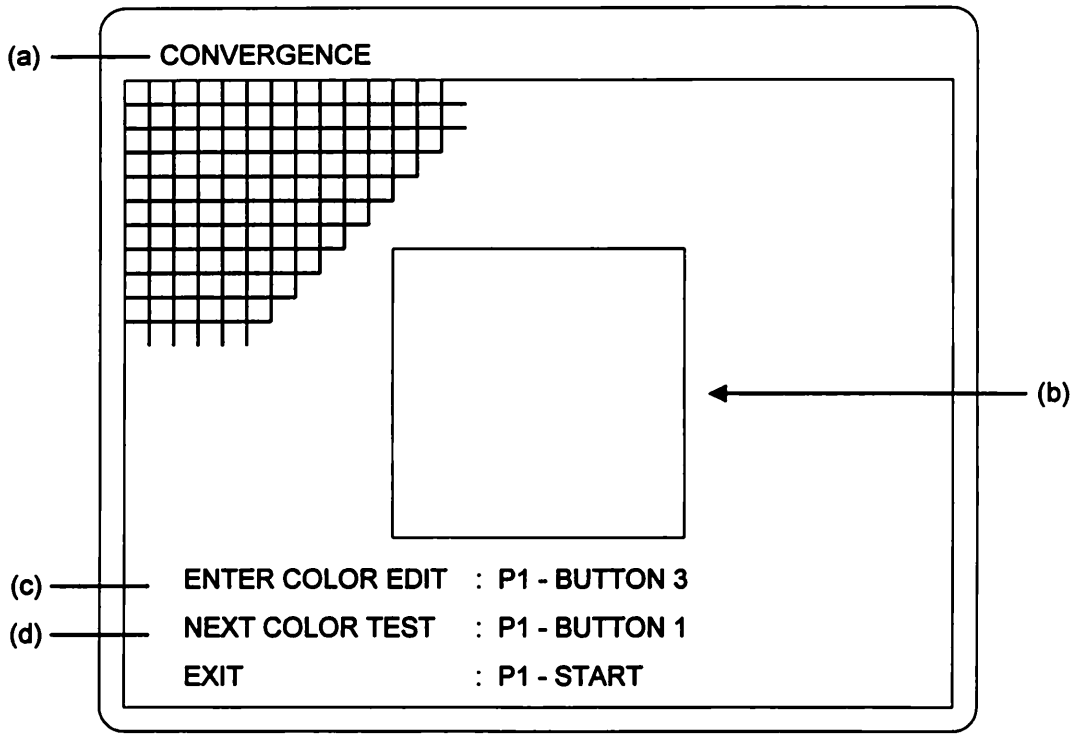

a) The CONVERGENCE test or "cross hatch" pattern can be used to verify and adjust the display size and position, and to check the distortion.

b) The default display and "window" is white on a black background. If there is "bleeding" of R, G, B colors around the white grid lines, then monitor convergence adjustments can be made such that all three colors are coincident. (Refer to monitor service manual). Press the P1-BUTTON 2 (right Punch) to sequence through additional display colors (blue, red, violet, green, light blue, yellow, black on white, and back to white).

c) Color Edit can be called up by pressing P1-BUTTON 3.

d) Press P1-BUTTON 1 to switch to the DIAGONAL test pattern, or, press P1 -START to exit to the main test menu.

4.3.1.2 DIAGONAL Test Pattern

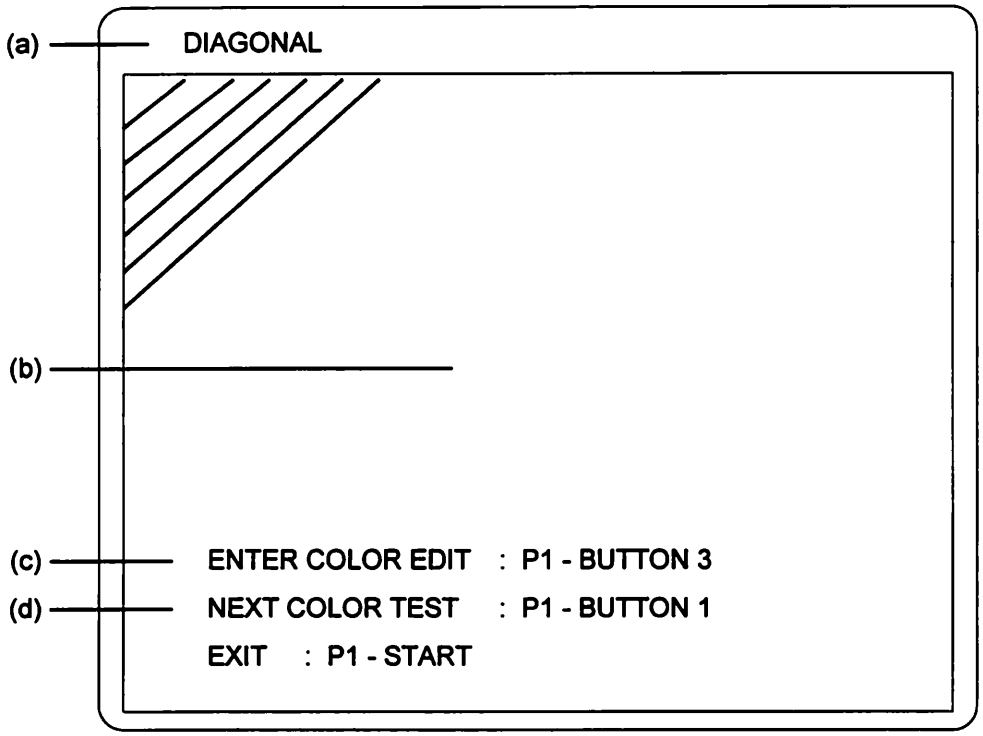

a) The DIAGONAL test pattern is used to check the monitor in interlace scanning mode. (Reference Color Edit description).

b) The default display consists of white diagonal lines on a black background. Press the P1-BUTTON 2 (right Punch) to sequence through additional display colors (blue, red, violet, green, light blue, yellow, black on white, and back to white). If display jitter is present, then switch interlace/non-interlace modes in Color Edit.

c) The Color Edit adjustment screen can be called up by pressing P1-BUTTON 3.

d) Press P1-BUTTON 1 to switch to the COLOR BAR test pattern.

4.0 SET-UP AND TEST

4.1 Test Mode

TEST mode allows the operator to test the game controls, set various game options, set coin options, and test the video monitor.

4.2 Test Mode Procedure

To enter TEST Mode, open the coin door and set the TEST switch to the ON Position.

> **Alt. Method**: Flip Switch No. 1 on the System PCB to the ON position. Switch No. 2 should remain OFF at all times.

To adjust the setup options, follow these steps:

1. Select the desired test screen (a) using the P1 joystick. The selected item is displayed in red.
2. Display the selected screen by pressing P1-BUTTON 1 (left Punch).
3. Within each screen, select and adjust each option using the P1 joystick and P! buttons as indicated on the screen graphic.
4. When exiting TEST Mode, always select EXIT & SAVE (b) before pressing P1-BUTTON 1 to end it. If EXIT & SAVE is not selected, TEST Mode will *not* be exited even if the TEST Switch is turned OFF.

4.3 TEST Menu

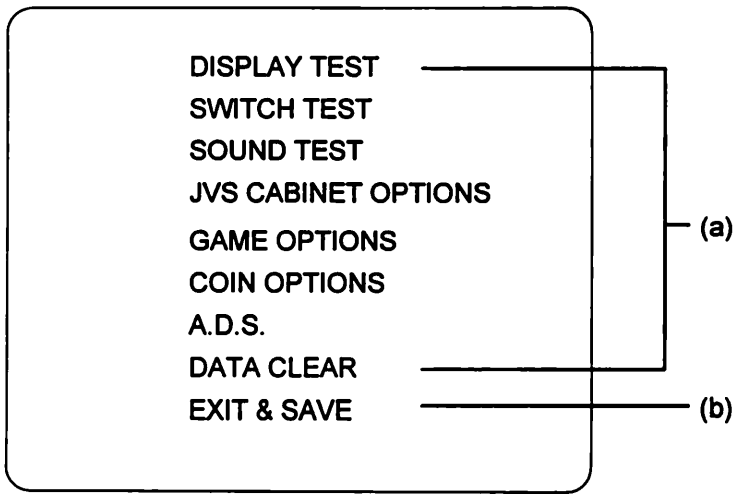

3.2 Cabinet Preparation

Remove the following from the existing game or standard cabinet:

1. Game PCB
2. Control Panel
3. Marquee
4. Decals

Clean and fill all blemishes and dents and paint the exterior of the cabinet as needed.

3.3 Game Installation

1. While carefully handling the PCB, locate the audio volume control and PCB test switches, and set them in accordance with the following:

Test Switch 1	If an external service/test panel is to be used, this switch should be set to OFF. Test mode ON/OFF will be controlled by the external TEST switch. If PCB Test Switch 1 is ON, the game will be in Test mode.
Test Switch 2	Set to OFF. When ON, the screen is in Stop mode.
Volume control	Turn clockwise to increase audio volume. If external potentiometers are to be used for output attenuation, the PCB volume control should be set at least 1/2 turn CW.

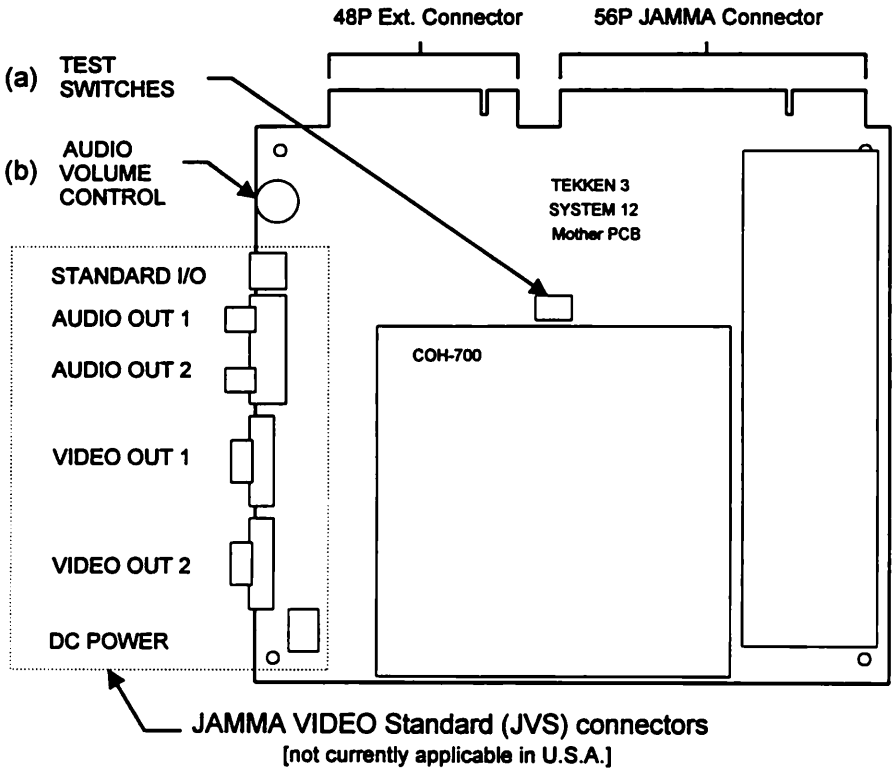

2.0 INTRODUCTION

TEKKEN 3 is the sequel to the successful **TEKKEN 2** high performance, low cost, polygon texture-mapped fighting game. The **TEKKEN 3** Kit PCB is based on the new Namco System 12 architecture which features improved color editing of play screens, selectable interlace/non-interlace video modes, and compatibility with both JAMMA and the emerging JVS interface standards.

2.1 Game Conversion Overview

The **TEKKEN 3 Kit** consists of the **TEKKEN 3** PCB set, a standard JAMMA (56 pin) wire harness, an extended JAMMA (48 pin) wire harness for stereo and extra controls, a set of player controls and **TEKKEN 3** graphics. This kit can be installed in an industry-standard 25 or 27 inch RGB color monitor kit cabinet, or, with the appropriate RGB conversion, can be used in conjunction with NTSC-compatible video monitors of any size. Optimum results are achieved by installing **TEKKEN 3** in a cabinet with stereo speakers and a large 4 player size control panel.

2.2 Maximizing Earnings

To achieve optimum earnings it is recommended that you set the game to Namco's USA RECOMMENDED FACTORY SETTINGS. We believe that these settings are the most suitable for a wide variety of locations. These settings are shown in the Game Options and Coin Options test screens. However, as all locations are not alike, settings are easily adjustable via the TEST MODE menu options.

[illegible]
[illegible]
[illegible]
[illegible]
[illegible]
[illegible]
[illegible]
[illegible]
[illegible]
[illegible]
[illegible]
[illegible]
[illegible]
[illegible]
[illegible]
[illegible]
[illegible]
[illegible]
[illegible]
[illegible]
[illegible]
[illegible]
[illegible]
[illegible]
[illegible]
[illegible]
[illegible]
[illegible]
[illegible]
[illegible]
[illegible]
[illegible]
[illegible]
[illegible]
[illegible]
[illegible]
[illegible]

namco® America Inc.

Kit Installation and Operation Manual

Important

Read PRECAUTIONS and INSTALLATION Sections before operating game

FCC Notice

Note: This equipment has been tested and found to comply with the limits for a Class A digital device, pursuant to Part 15 of the FCC Rules. These limits are designed to provide reasonable protection against harmful interference when the equipment is operating in a commercial environment. This equipment uses, and can radiate radio frequency energy and, if not installed and used in accordance with the instruction manual, may cause harmful interference to radio communications. Operation of this equipment in a residential area is likely to cause harmful interference in which case the user will be required to correct the interference at his own expense.

Copyright 1997 NAMCO AMERICA INC. - All rights reserved

No part of this publication may be reproduced by any mechanical, photographic, or electronic process, or in the form of a phonographic recording, nor may it be stored in a retrieval system, transmitted, or otherwise copied for public or private use, without permission from NAMCO AMERICA INC.

WARRANTY

Seller warrants that its printed circuit boards and parts thereon are free from defects in materials and workmanship under normal use and service for a period of ninety (90) days from the date of shipment. Seller warrants that its video displays (in games supplied with video displays) are free from defects in material and workmanship under normal use and service for a period of thirty (30) days from the date of shipment. None of the Seller's other products or parts thereof are warranted. Seller's sole liability shall be, at its option, to repair, replace, or credit Buyer's account for such products which are returned to Seller during said warranty period, provided:

a) Seller is promptly notified in writing upon discovery by Buyer that said products are defective.

b) Such products are returned prepaid to Seller's plant; and

c) Seller's examination of said products discloses to Seller's satisfaction that such alleged defects existed and were not caused by accident, misuse, neglect, alteration, improper repair, improper installation, or improper testing.

In no event shall Seller be liable for loss of profits, loss of use, incidental or consequential damages.

Except for any express warranty set forth in a written contract between Seller and Buyer which contract supersedes the terms herein, this warranty is in lieu of all other warranties expressed or implied, including the implied warranties of merchantability and fitness for a particular purpose, and all other obligations or liabilities on the Seller's part, and it neither assumes nor authorizes any other person to assume for the Seller any other liabilities in connection with the sale of products by Seller.

Namco America Inc. distributors are independent, being privately owned and operated. In their judgment they may sell parts or accessories other than **Namco America Inc.** parts or accessories. **Namco America Inc.** cannot be responsible for the quality, suitability or safety of any non-**Namco America Inc.** part or any modification including labor which is performed by such distributor.

SERVICE

If you have questions regarding any **Namco America Inc.** product or require technical support:

Contact **Namco America Inc.** Customer Service at:

1 (800) 326-4263 or FAX (408) 232-3060

Hours: 7:00 am - 5:00 pm PDT

Parts and repair services for **Namco America Inc.**
products are available through your distributor.

namco America Inc.
150 Charcot Ave.
San Jose, CA 95131
(408) 383-3900
FAX: (408) 383-0128
Technical Assistance (USA)
(800) 326-4263 Fax: (408) 232-3060

Reorder Number T345-06564-00
REV. A