ATARI®
GAMES

TM-364
1st printing

BATMAN™

Kit Installation Instructions

Warranty

Seller warrants that its printed-circuit boards and parts thereon are free from defects in material and workmanship under normal use and service for a period of ninety (90) days from date of shipment. Seller warrants that its video displays and laser-video disc players (in games supplied with displays and video-disc players) are free from defects in material and workmanship under normal use and service for a period of thirty (30) days from date of shipment. None of the Seller's other products or parts thereof are warranted.

If the products described in this manual fail to conform to this warranty, Seller's sole liability shall be, at its option, to repair, replace, or credit Buyer's account for such products which are returned to Seller during said warranty period, provided:

(a) Seller is promptly notified in writing upon discovery by Buyer that said products are defective;

(b) Such products are returned prepaid to Seller's plant; and

(c) Seller's examination of said products discloses to Seller's satisfaction that such alleged defects existed and were not caused by accident, misuse, neglect, alteration, improper repair, installation, or improper testing.

In no event shall Seller be liable for loss of profits, loss of use, incidental or consequential damages.

Except for any express warranty set forth in a written contract between Seller and Buyer which contract supersedes the terms herein, this warranty is expressed in lieu of all other warranties expressed or implied, including the implied warranties of merchantability and fitness for a particular purpose, and of all other obligations or liabilities on the Seller's part, and it neither assumes nor authorizes any other person to assume for the Seller any other liabilities in connection with the sale of products by Seller.

The use of any non-Atari parts may void your warranty, according to the terms of the warranty. The use of any non-Atari parts may also adversely affect the safety of your game and cause injury to you and others. Be very cautious in using non-Atari-supplied components with our games, in order to ensure your safety.

Atari distributors are independent, being privately owned and operated. In their judgment they may sell parts or accessories other than Atari parts or accessories. Atari Games Corporation cannot be responsible for the quality, suitability or safety of any non-Atari part or any modification including labor which is performed by such distributor.

BATMAN™

Kit Installation Instructions

Universal conversion kit for upright games

BATMAN and all related characters, slogans, vehicles, accessories and indicia are trademarks of DC Comics Inc. © 1991. All Rights Reserved.

Copyright © 1991 by Atari Games Corporation. All rights reserved.

No part of this publication may be reproduced by any mechanical, photographic or electronic process, or in the form of a phonographic recording, nor may it be stored in a retrieval system, transmitted, or otherwise copied for public or private use, without permission from the publisher.

The game play, all graphic designs, this technical manual, its accompanying schematic diagrams, and the display manual are protected by the U.S. Copyright Act of 1976.

This Act provides for substantial penalties for violating federal copyright laws. Courts can impound infringing articles while legal action is pending. If infringers are convicted, courts can order destruction of the infringing articles.

In addition, the Act provides for payment of statutory damages of up to $50,000 per infringing transaction in certain cases. Infringers may also have to pay costs and attorneys' fees and face an imprisonment of up to five years as well as fines of up to $250,000 in the case of individuals and up to $500,000 in the case of corporations.

Atari Games Corporation will aggressively enforce its copyrights against infringers. We will use all legal means to immediately halt any manufacture, distribution, or operation of a copy of video games made by us. Anyone who purchases such copies risks forfeiting such a game.

Published by:
Atari Games Corporation
675 Sycamore Drive
P.O. Box 361110
Milpitas, California 95036

Printed in the U.S.A. **3/91**

Produced by the Atari Games Technical Publications Department.
Writing and Editing: Andrea Dencker
Illustration and Design: Mary Ohanessian Sumner

NOTICE RE. NON-ATARI PARTS

WARNING

Use of non-Atari parts or modifications of any Atari game circuitry may adversely affect the safety of your game, and may cause injury to you and your players.

You may void the game warranty (printed on the inside back cover of this manual) if you do any of the following:

- Substitute non-Atari parts in the game.
- Modify or alter any circuits in the game by using kits or parts *not* supplied by Atari Games Corporation.

NOTE

This equipment generates, uses, and can radiate radio frequency energy, and if not installed and used in accordance with the instruction manual, may cause interference to radio communications. It has been tested and found to comply with the limits for a Class A computing device pursuant to Subpart J of Part 15 of Federal Communications Commission (FCC) Rules, which are designed to provide reasonable protection against such interference when operated in a commercial environment. Operation of this equipment in a residential area or modification to this equipment is likely to cause interference, in which case the user, at his own expense, will be required to take whatever measures may be required to correct the interference. If you suspect interference from an Atari game at your location, check the following:

- All ground wires in the game are properly connected as shown in the game wiring diagram.
- The power cord is properly plugged into a grounded three-wire outlet.
- The game printed-circuit boards (PCBs) are properly installed with **all** screws in place and tightened.

If you are still unable to solve the interference problem, please contact Customer Service at Atari Games Corporation. See the inside front cover of this manual for service in your area.

SAFETY SUMMARY

The following safety precautions apply to all game operators and service personnel. Specific warnings and cautions will be found in this manual whenever they apply.

WARNING

Properly Ground the Game. Players may receive an electrical shock if this game is not properly grounded! To avoid electrical shock, do not plug in the game until it has been inspected and properly grounded. This game should only be plugged into a grounded three-wire outlet. If you have only a two-wire outlet, we recommend you hire a licensed electrician to install a three-wire grounded outlet. If the control panel is not properly grounded, players may receive an electrical shock! After servicing any part on the control panel, check that the grounding wire is firmly secured to the inside of the control panel. After you have checked this, lock up the game.

AC Power Connection. Before you plug in the game, be sure that the game's power supply can accept the AC line voltage in your location. The line voltage requirements are listed in the first chapter of this manual.

Disconnect Power During Repairs. To avoid electrical shock, disconnect the game from the AC power before removing or repairing any part of the game. If you remove or repair the video display, be very careful to avoid electrical shock. High voltages continue to exist even after power is disconnected in the display circuitry and the cathode-ray tube (CRT). Do not touch the internal parts of the display with your hands or with metal objects! Always discharge the high voltage from the CRT before servicing it. Do this after you disconnect it from the power source. First, attach one end of a large, well-insulated, 18-gauge jumper wire to ground. Then momentarily touch the free end of the grounded jumper wire to the CRT anode by sliding the wire under the anode cap. Wait two minutes and do this again.

Use Only Atari Parts. To maintain the safety of your Atari game, use only Atari parts when you repair it. Using non-Atari parts or modifying the game circuitry may be dangerous, and could injure you and your players.

Handle the CRT With Care. If you drop the CRT and it breaks, it may implode! Shattered glass from the implosion can fly six feet or more.

Use the Proper Fuses. To avoid electrical shock, use replacement fuses which are specified in the parts list for this game. Replacement fuses must match those replaced in fuse type, voltage rating, and current rating. In addition, the fuse cover must be in place during game operation.

CAUTION

Properly Attach All Connectors. Make sure that the connectors on each printed circuit board (PCB) are properly plugged in. The connectors are keyed to fit only one way. If they do not slip on easily, do not force them. If you reverse a connector, it may damage your game and void your warranty.

Ensure the Proper AC Line Frequency. Video games manufactured for operation on 60 Hz line power (used in the United States) must not be operated in countries with 50 Hz line power (used in Europe). If a 60 Hz machine operates on 50 Hz line power, the fluorescent line ballast transformer will overheat and cause a potential fire hazard. Check the product identification label on your machine for the line frequency required.

ABOUT NOTES, CAUTIONS, AND WARNINGS

In Atari publications, notes, cautions and warnings have the following meaning:

NOTE — A highlighted piece of information.

CAUTION — Equipment and/or parts can be damaged or destroyed if instructions are not followed. You will void the warranty on Atari printed-circuit boards, parts thereon, and video displays if equipment or parts are damaged or destroyed due to failure of following instructions.

WARNING — Players and/or technicians can be killed or injured if instructions are not followed.

CONTENTS

1 Set-Up

How to Use This Manual 1-1
Cabinet Equipment Requirements 1-2
Tools Required 1-2
Inspecting the Kit 1-3
Preparing the Cabinet for the Kit Installation 1-3
Assembling the Control Panel 1-6
Connecting the JAMMA Harness 1-7
Installing the Batman Board Set 1-8
Installing the Bezel, Decals, Labels, and Attraction Assembly 1-8
Setting the Coin and Game Options 1-8
Maximizing Earnings 1-8
Game Play 1-8

2 Self-Test

Introduction 2-1
Entering and Exiting the Self-Test 2-2
Select Test Menu 2-2
Adjust Volume 2-2
Statistics 2-2
Game Options 2-3
Coin Options 2-3
Sound Board Test 2-4
Switch Test 2-4
Complete RAM Test 2-6
Complete ROM Test 2-6
Dual Playfield Test 2-6
Motion Object Test 2-7
Alphanumeric Test 2-7
Monitor Tests 2-7

3 Troubleshooting and Maintenance

Introduction 3-1
Joystick Control 3-3
ROMs and RAMs 3-3
Video Display Sync Problems 3-3

4 Parts Illustrations

See the List of Illustrations that follows.

5 Schematic Diagrams

See the List of Illustrations that follows.

Statistics Sheet

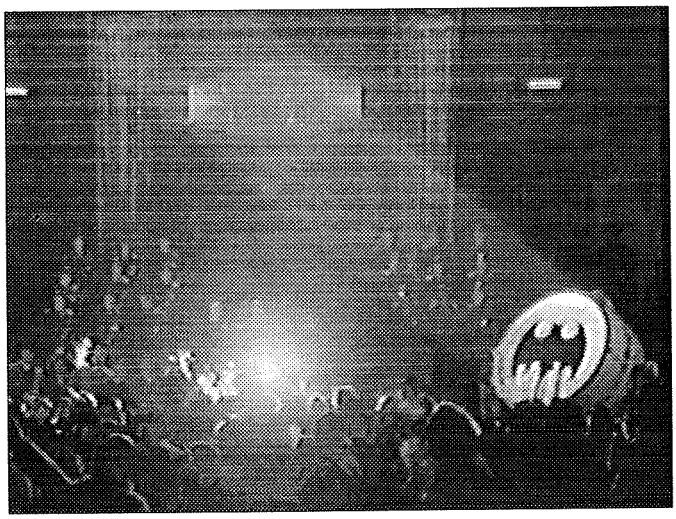

ILLUSTRATIONS

Figure 1-1 Installed Kit Parts 1-3
Figure 1-2 Locations of Control Panel Holes to be Drilled 1-6
Figure 1-3 Control Panel Template 1-11

Figure 2-1 Self-Test Menu Screen 2-2
Figure 2-2 Statistics Screen 2-3
Figure 2-3 Game Options Screen 2-3
Figure 2-4 Coin Options Screen 2-4
Figure 2-5 Sound Test Screen 2-5
Figure 2-6 Switch Test Screen 2-5
Figure 2-7 RAM Test Menu 2-6
Figure 2-8 Complete ROM Test Screen 2-6
Figure 2-9 Playfield Test Screen 2-7

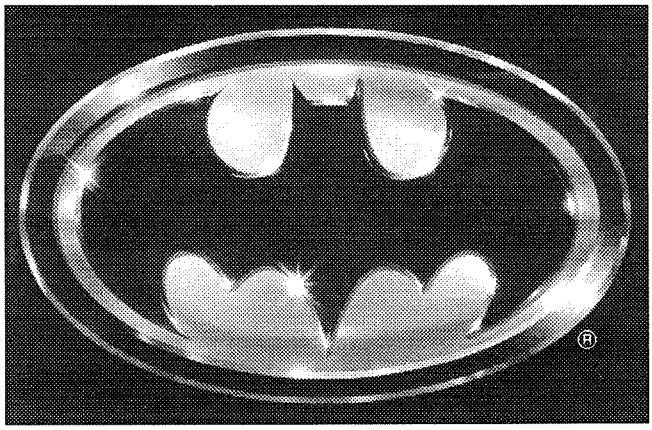

Figure 2-10 Motion Object Test Screen 2-7
Figure 2-11 Color Test Screen 2-8
Figure 2-12 Convergence Test Screen 2-8

Figure 4-1 Parts for Batman Universal Kit 4-2
Figure 4-2 Joystick Assembly 4-3
Figure 4-3 Batman Game PCB Assembly 4-4
Figure 4-4 JSA III PCB Assembly 4-5

Figure 5-1 Batman Game PCB Assembly Schematic Diagram 5-2
Figure 5-2 JSA III PCB Assembly Schematic Diagram 5-8

TABLES

Table 1-1 Equipment Requirements 1-2
Table 1-2 Contents of Batman Kit 1-2
Table 1-3 JAMMA Pin and Wire Connections 1-4

Table 2-1 Summary of All Self-Test Screens 2-2
Table 2-2 Game Option Settings 2-4
Table 2-3 Coin Option Settings 2-5
Table 2-4 When to Run the RAM Tests 2-6
Table 2-5 Bad RAM Locations by Error Address 2-7

Table 3-1 Troubleshooting Table 3-2
Table 3-2 Voltage Inputs and Test Points on the PCBs 3-3
Table 3-3 What ROM Problems Look Like 3-3

NOTE

There is no longer a volume adjustment on the PCB. Volume is now adjusted in the Self-Test.

NOTES

CHAPTER 1

Installation

How to Use This Manual

This manual provides information for installing, testing, and troubleshooting the Batman™ universal conversion kit. ■ Chapter 1 describes how to install the Batman kit in your cabinet. This chapter also describes game play. ■ Chapter 2 contains self-test procedures and additional diagnostic tests. The self-test is important in the Batman game. You can troubleshoot the PC boards, main circuits, and controls using the screens in the self-test. You should regularly test the boards and controls with the self-test to keep your game in peak condition and at top earnings. ■ Chapter 3 contains contains troubleshooting and maintenance procedures for the joystick control. ■ Chapter 4 contains the kit parts list and parts illustrations. ■ Chapter 5 contains the schematics for the Batman game PCB and the JSA III PCB.

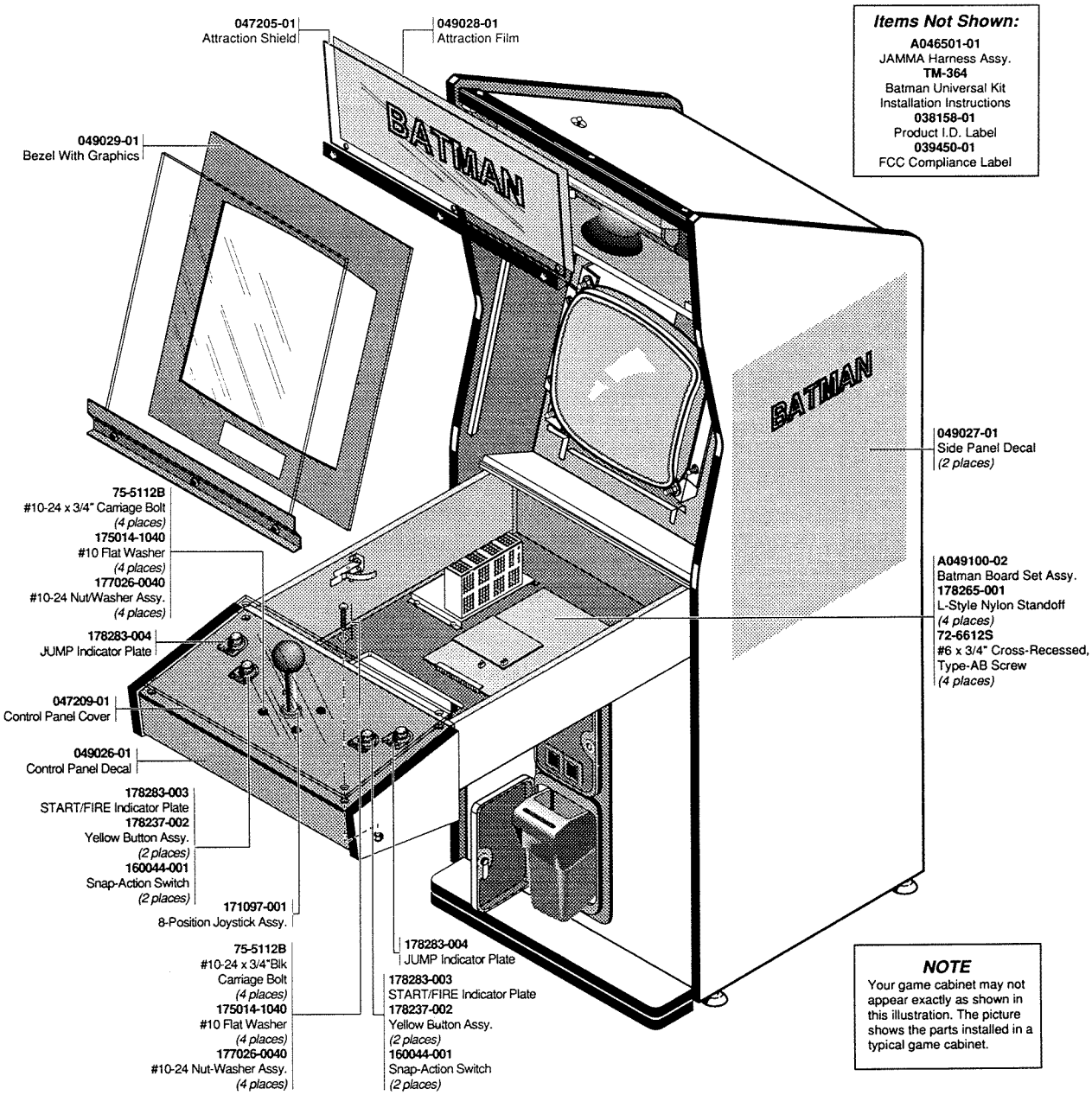

Figure 1-1 Installed Kit Parts

Inspecting the Kit

Check to see that you have all the parts listed in the kit parts list in Table 1-2. If any part is missing or damaged, contact your distributor with the Batman kit serial number, part number, and description of the missing or damaged parts, and date received.

Preparing the Cabinet for the Kit Installation

WARNING

To avoid electrical shock, unplug the cabinet while installing the kit. After installation, plug the game only into a grounded 3-wire outlet.

Table 1-3 JAMMA Pin and Wire Connections

Pin	Wire Color	Signal	Instructions
Component Side			
1	BN	GND	Connect to the 5V RTN (GND) terminal on the power supply. However, if you have 12V RTN, connect *one* of the BN wires at pin 1, 2, A, or B to the 12V RTN terminal.
2	BN	GND	Same as pin **1**.
3	R	+5V	Connect to the +5V terminal on the power supply. However, if your power supply has a +SENSE terminal, connect *one* of the R wires at pin 3, 4, C, or D to +SENSE instead of +5V.
4	R	+5V	Same as pin **3**.
5	OR	–5V	Connect to the –5V terminal of the power supply. If –5V is not available, connect to the 12V RTN or the 5V RTN (GND) or leave it unconnected. *NOTE: If you do not have (or use) –5V, the maximum power to the speaker will be reduced by half.*
6	Y	+12V	Connect to the +12V terminal of the power supply. If your coin counter(s) require 12V, also connect to the + side of the coin counter(s).
7		**Key**	
8	BU/W	COIN CTR 1	Connect this wire to one side of the left 12V coin counter. *Note: Do not use 24V counters.* If your counter requires 5V, connect a wire from the +5V terminal on the power supply.
9		Not used	
10	BN	SPKR +	Connect to the + terminal on the speaker. (This wire is part of a twisted pair.)
11		Not used	
12	R	RED	Attach to the video display.
13	BU	BLUE	Attach to the video display.
14	BK	VIDEO GND	Attach to the video display.
15	W	SELF-TEST	Use this wire if you want an external self-test switch. However, the kit already has a self-test switch on the JSA Audio III PCB. *(If you connect an external self-test switch, turn off the switch on the PCB. Connect the wire to the N.O. terminal on the external self-test switch. Connect the common terminal of the switch to a BK/W wire [GND].)*
16	Y	LT COIN	Connect to the N.O. terminal of the left coin switch. Connect the common terminal of the switch to a BK/W wire.
17	W/BK	STRT1	JAMMA start switch (optional)
18	W/BN	JOYST UP	Connect to the N.O. terminal of the switch. Connect the common terminal of the switch to one of the BK/W wires.
19	W/R	JOYST DN	Same as pin **18**.
20	W/OR	JOYST LT	Same as pin **18**.
21	W/Y	JOYST RT	Same as pin **18**.
22	W/GN	START/FIRE	Connect this wire to the N.O. terminals of the START/FIRE button switches. Connect the common terminals of the switches to one of the BK/W wires.
23	W/BU	JUMP	Connect this wire to the N.O. terminals of the JUMP button switches. Connect the common terminals of the switches to one of the BK/W wires.
24	W/V	Not used	
25	W/GY	Not used	
26	V	Not used	
27	BK/W	GND	Connect one of the BK/W wires at pin 27, 28, e, and f to the negative sense terminal of the power supply (if it exists) and one to the common terminals of the coin switches. Connect two of these wires to the common terminals of the control switches on the control panel.
28	BK/W	GND	Same as pin **27**.

Table 1-3 JAMMA Wire Connections, Continued

Pin	Wire Color	Signal	Instructions
Solder Side			
A	BN	GND	Connect to the 5V RTN (GND) terminal on the power supply. However, if you have 12V RTN, connect *one* of the BN wires at pin 1, 2, A, or B to the 12V RTN terminal.
B	BN	GND	Same as pin **A**.
C	R	+5V	Connect to the +5V terminal on the power supply. However, if your power supply has a +SENSE terminal, connect *one* of the R wires at pin 3, 4, C, or D to +SENSE instead of +5V.
D	R	+5V	Same as pin **C**.
E	OR	–5V	Connect to the –5V terminal of the power supply. If –5V is not available, connect to the 12V RTN or the 5V RTN (GND) or leave it unconnected. *NOTE: If you do not have (or use) –5V, the maximum power to the speaker will be reduced by half.*
F	Y	+12V	Connect to the +12V terminal of the power supply.
H		**Key**	
J	V/W	COIN CTR 2	Connect this wire to one side of the right 12V coin counter. Clip R19 on the Batman game PCB if you use a second coin counter. *Note: Do not use 24V counters.* If your counter requires 5V, connect a wire from the +5V terminal on the power supply. Also clip R19 on the game PCB.
K		Not used	
L	W	SPKR–	Connect to the – terminal on the speaker. (This wire is one of a twisted pair.)
M		Not used	
N	GN	GREEN	Attach to the video display.
P	BN	$\overline{\text{COMPSYNC}}$	Attach to the video display.
R	GY	Service	
S		Not used	
T	OR	RT COIN	Connect to the N.O. terminal of the right coin switch. Connect the common terminal of the switch to a BK/W wire.
U	Y/BK	Not used	
V	Y/BN	Not used	
W	Y/R	Not used	
X	Y/OR	Not used	
Y	Y/W	Not used	
Z	Y/GN	Not used	
a	Y/BU	Not used	
b	Y/V	Not used	
c	Y/GY	Not used	
d	GY/W	Not used	
e	BK/W	GND	Connect one of the BK/W wires at pin 27, 28, e, or f to the negative sense terminal of the power supply (if it exists) and one to the common terminals of the coin switches. Connect two of these wires to the common terminals of the control switches on the control panel.
f	BK/W	GND	Same as pin **e**.

Figure 1-1 shows almost all kit parts installed in a typical cabinet. Use this illustration as a guide while you install the parts.

1. Turn off power to the game, and unplug the power cord.
2. Remove the following from the cabinet:
   - Existing PCBs
   - Game harness, if it is not Japan Amusement Machinery Manufacturers Association (JAMMA)–compatible
   - Control panel decals, labels, and controls

- Side decals, graphics, and adhesive. If the cabinet sides are damaged, repair them before putting on the new decals.
- Video display (monitor) shield, display bezel, attraction shield, and marquee.

3. Wipe down and vacuum the cabinet. Paint the cabinet, if required.

Assembling the Control Panel

Parts Needed

To assemble the control panel, you need the control panel hole-cutting template, which is printed on page 1-11. Cut out the template sheet near the staples. You will also need the following parts from the kit:

- Clear cover for the control panel
- Control panel decal
- Four yellow button assemblies
- Two "Start/Fire" and two "Jump" indicator plates
- Four snap-action switches
- One 8-position joystick control
- Eight #10 x ¾"-long black carriage bolts, flat washers, and nut/washer assemblies

Installing the Parts

1. Using carbon paper, transfer the joystick mounting pattern from the template to the control panel. Also refer to Figure 1-2 for the exact locations of all holes.
2. Drill four ¼" holes in the metal control panel for the joystick's mounting bolts.
3. Using a saber saw, carefully cut out the large hole for the joystick and the four smaller holes for the pushbuttons. Deburr the sharp edges with a file.
4. Lay the acrylic cover over the top of the control panel and mark the outside shape of the panel on the plastic. Also mark the four pushbutton holes as close as possible to the locations shown on the template. Mark the joystick holes. Lastly, mark the positions of the four corner holes that will be used for securing the cover to the control panel. These four holes can be placed anywhere near the corners — wherever space permits.
5. Using a bandsaw, cut the control panel cover to its correct outside shape.

WARNING

Wear safety glasses when drilling the plastic control panel cover. Use care to avoid shattering or chipping the plastic.

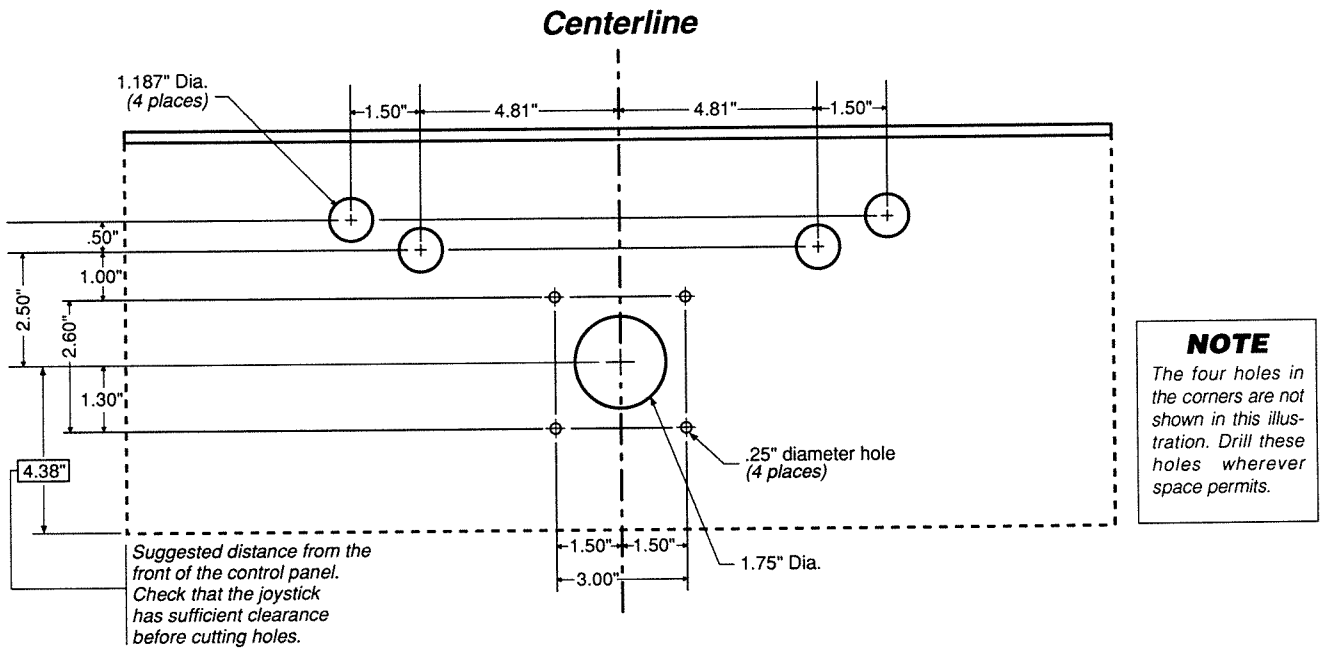

Figure 1-2 Locations of Control Panel Holes to be Drilled

6. Tape or glue the template to the acrylic cover. To start the saber saw cut, drill a 1/2" hole inside the large joystick hole and inside the four smaller holes for the pushbuttons.
7. Saw out the large joystick hole and the four smaller holes.
8. Drill the four 5/16" holes that will be used to mount the cover to the control panel and the four 5/16" holes to mount the joystick.
9. To prevent injury, carefully deburr all the edges of the acrylic cover.
10. Install the control panel decal on the control panel. Use a sharp X-ACTO knife to trim the outside edge and to cut out the holes for the controls.
11. Install the cover on the control panel with four ¾"-long carriage bolts, washers, and locknuts.
12. Install the joystick assembly using the four remaining ¾"-long carriage bolts. Install the four yellow button assemblies, the four indicator plates, and the four snap-action switches. Make sure the START/FIRE plates are closest to the joystick, and the JUMP plates are closest to the outside edges of the control panel.

For maintenance and servicing information on the joystick control, refer to Chapter 3 of this manual.

Connecting the JAMMA Harness

1. If your game cabinet does not already have a JAMMA harness, install the JAMMA harness in the cabinet.
2. Install the split beads on the harness as close to the PCB edge connector as possible. Hold the beads on the harness with the tie wrap included in the kit.

CAUTION

You must install the split beads included in the kit on the JAMMA harness to meet FCC requirements.

3. Using Table 1-2 for wiring information, connect the JAMMA harness to existing component harnesses. Use crimp splices or butt soldering.

WARNING

Do not simply tie the wires together. If you do, you could cause intermittent problems, loose connections, oxidation, or a fire.

Connecting Power Wires

1. Connect the wires on the JAMMA harness to the wires for the power supply, as shown in Table 1-3. The Batman kit requires +5V and +12V. If -5V is available, it should be used too. Tie off any other voltage wires on the power supply besides +5V, –5V, and +12V.

   There is more than one wire for each voltage in the JAMMA harness. Use more than one wire for each voltage (connecting them as described in Table 1-3) so that the power wiring does not overload and burn.

Connecting Video Display Wires

Connect the wires designated for the red, green and blue video guns along with the sync and ground wires, according to Table 1-3.

Connecting Coin Door Wires

1. Connect the wires on the JAMMA harness to the coin switches and meter according to Table 1-3.
2. Connect one terminal of the door lamps to one of the BK/W wires. Connect the other terminal of the door lamps to the R wire supplying +5V.

NOTE

Do not use –5V for the coin door lamps. –5V is required for audio.

Some games have separate power supply outputs for the coin door lamps. If you choose to use these outputs, make sure you connect both terminals of each lamp to the terminals on the power supply.

Connecting the Control Wires

Connect the joystick harness and the button harnesses to the JAMMA harness using crimp splices or butt soldering, according to the information in Table 1-3.

Grounding the Cabinet

Find the ground lead (green) of the 115V input power line. Connect this lead in daisy-chain fashion to a bare metal part of the coin door, the control panel, the

video display, and the power supply. This AC ground must be of #18 AWG wire or larger.

WARNING

*For the safety of players, you **must** connect the green ground wire as previously indicated.*

Checking the JAMMA Connections

Before plugging in the game PCB, turn on the power to the game, and check +5 Volts on pins 3, 4, C, and D of the JAMMA connector; +12 Volts on pins F and 6; and –5 Volts on pins E and 5.

Check that the video display and the attraction lamp have power. Now turn off the power to the game.

Installing the Batman™ Board Set

The Batman board set in your kit is shipped already assembled at the factory. The board set consists of the Batman game PCB and the JSA (JAMMA Stand-Alone) Audio III PCB, plus attachment hardware.

1. After you have checked the power on the JAMMA connector (above), install the Batman board set in the cabinet. Use the nylon standoffs and four #6 x ¾"-long screws in the kit.
2. Connect the JAMMA connector to the Batman game board.
3. Secure the JAMMA harness away from the PCB with cable ties.
4. Turn on the power to the game. Check that the boards function. If a video picture is not present, see Chapter 3.

NOTE

There is no longer a volume adjustment on the PCB. Volume is now adjusted in the self-test.

Installing the Bezel, Decals, Labels, and Attraction Assembly

The kit parts are shown assembled in a cabinet in Figure 1-1.

Installing the Display Bezel

Find the cardboard display bezel in the kit. This bezel can accommodate both 19-inch and 25-inch video displays. Follow the instructions on the back of the bezel, and cut the hole and outside edges as required.

Installing the Product ID and FCC Label

Place the product ID label and FCC compliance label on the back of the cabinet.

Installing the Side Panel Decals

Find the side panel decals in the kit. Wet the left and right side panels of the cabinet with slightly soapy water. Then position the decals as shown in Figure 1-1. Remove any wrinkles in the artwork using a squeegee. Allow the sides to dry.

Installing the Attraction Assembly

Find the Batman attraction shield and the attraction panel film in the kit. Using the existing shield as a template, cut the shield and film to size, if necessary. Install them on the cabinet as shown in Figure 1-1.

Setting the Coin and Game Options

Set the coin and game options in the self-test. See Chapter 2 for information about the option settings.

Maximizing Earnings

For maximum earnings, regularly maintain your Batman game following the instructions in Table 3-1, in Chapter 3.

When you set up the game and when you collect money, perform the automated self-test and check the controls with the Controls Test in the self-test.

Game Play

This section describes the theme of the Batman game and the game play features.

Introduction

The blockbuster movie is now the arcade hit! Packed with all the drama and action of the movie, the game even features digitized photos and actual movie soundtrack.

Batman is a one-player game with a joystick plus start/fire and jump buttons. A special feature encourages multi-coin drop for added earning power. Players

take on The Joker™ and his Goons with the Batrope™, Batarangs™ and Gas Grenades. Batman fights throughout Gotham City™, drives the Batmobile™ and even flies the Batwing™. In the end, share in Batman's triumphant victory over The Joker atop Gotham Cathedral.

Play Mode

The basic storyline remains true to the movie. The dark mood of the movie is further portrayed in the game's graphics, providing a cinematic look and feel to the game.

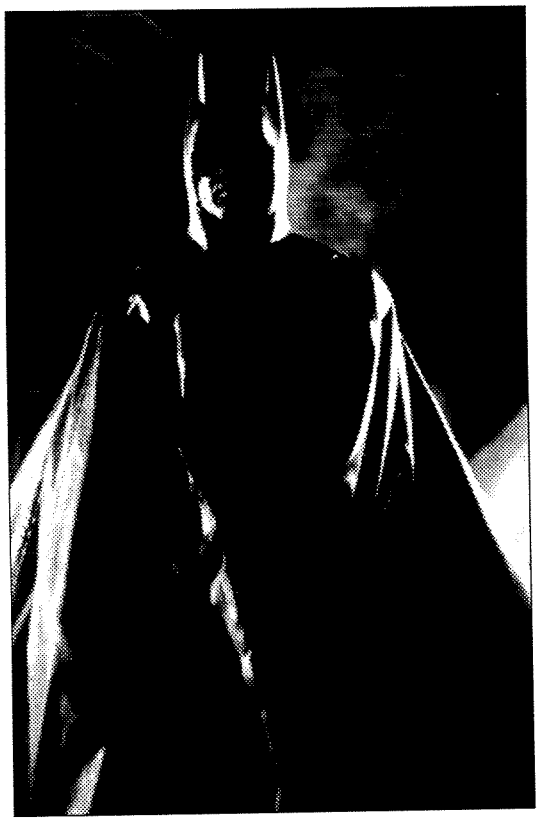

Players begin by choosing one of two coinage options presented. They can either play a one-credit game, or add another credit and get bonus game lives. For players who are looking for added value, this is the way to go!

Most scenes require Batman to reach a certain goal. Along the way, The Joker and his Goons try to stop him. Depending on the Goon, they must be hit anywhere from one to four times to kill them. The Joker needs to be hit numerous times in various situations just to chase him away. Batman must rely on his special weapons and fighting skills to be successful.

The joystick directs Batman in one of four directions. If used with the jump button, Batman can move diagonally.

One button controls firing and shooting. Point Batman and push the button for a powerful fire action.

Several weapons are at Batman's disposal. They include:

- Batrope™ — Pass over the Batrope icon to pick up the weapon. Pointing the joystick in the up position and pressing the button shoots a rope up and allows for a quick move from level to level in Axis Chemical™ and the Cathedral.
- Batarang™ — Pass over the Batarang icon to pick up the weapon. Each icon supplies 15 Batarangs. Press the button to throw/shoot Batarangs in the direction Batman is facing.
- Gas Grenades — Pass over the Gas Grenade icon to pick them up. Each icon supplies 15 Gas Grenades. Press the button to throw Gas Grenades in the direction Batman is facing.

Repeatedly pressing the Fire button very fast will sometimes make Batman do some other special moves. These include a spin-kick and a swing-kick (given a low structure overhead).

The other button makes Batman jump. Batman is allowed to jump both laterally and vertically. Depending on the situation, proper timing with both joystick and button will create a long jump. Batman can kick from both a stationary position or while running, if a Goon is nearby.

From the Batmobile™, Batman must shoot the enemy cars ahead of him. The first driving wave pits Batman against the Grissom gang's cars, and the second wave is made of The Joker's cars. Players aim their shots with the bat symbol cursor on the screen. Destroying each car awards 100 points and increases the progressive score. The next car will be 200, then 300, up to 1000 points. But if a car is missed and passes by, the progressive score value resets to 100.

In the Batwing, players must catch as many balloons as they can within the allotted time. By guiding the balloons between the "forks" in front of the Batwing, they can be caught. But The Joker makes this no easy task! His helicopters shoot while flying by, trying to knock the Batwing out of the sky. Aiming and shooting at the helicopters will temporarily allow time to collect the balloons.

Batman meets The Joker in many scenes of the game. In addition, The Joker has plenty of surprises for him. They include snapping teeth, a long pistol, deadly gas balloons, and a pen "mightier than the sword". Batman and The Joker end their battle on top of Gotham Cathedral, where they must fight it out "Mano A Mano". Here Batman finally settles his score with The Joker, and Gotham City™ is free of his crimes.

NOTES

NOTE

*This kit has duplicate Start/Fire and Jump buttons for player convenience. This template shows only **one** side of the player station. Be sure to drill **all** holes shown in Figure 1-2.*

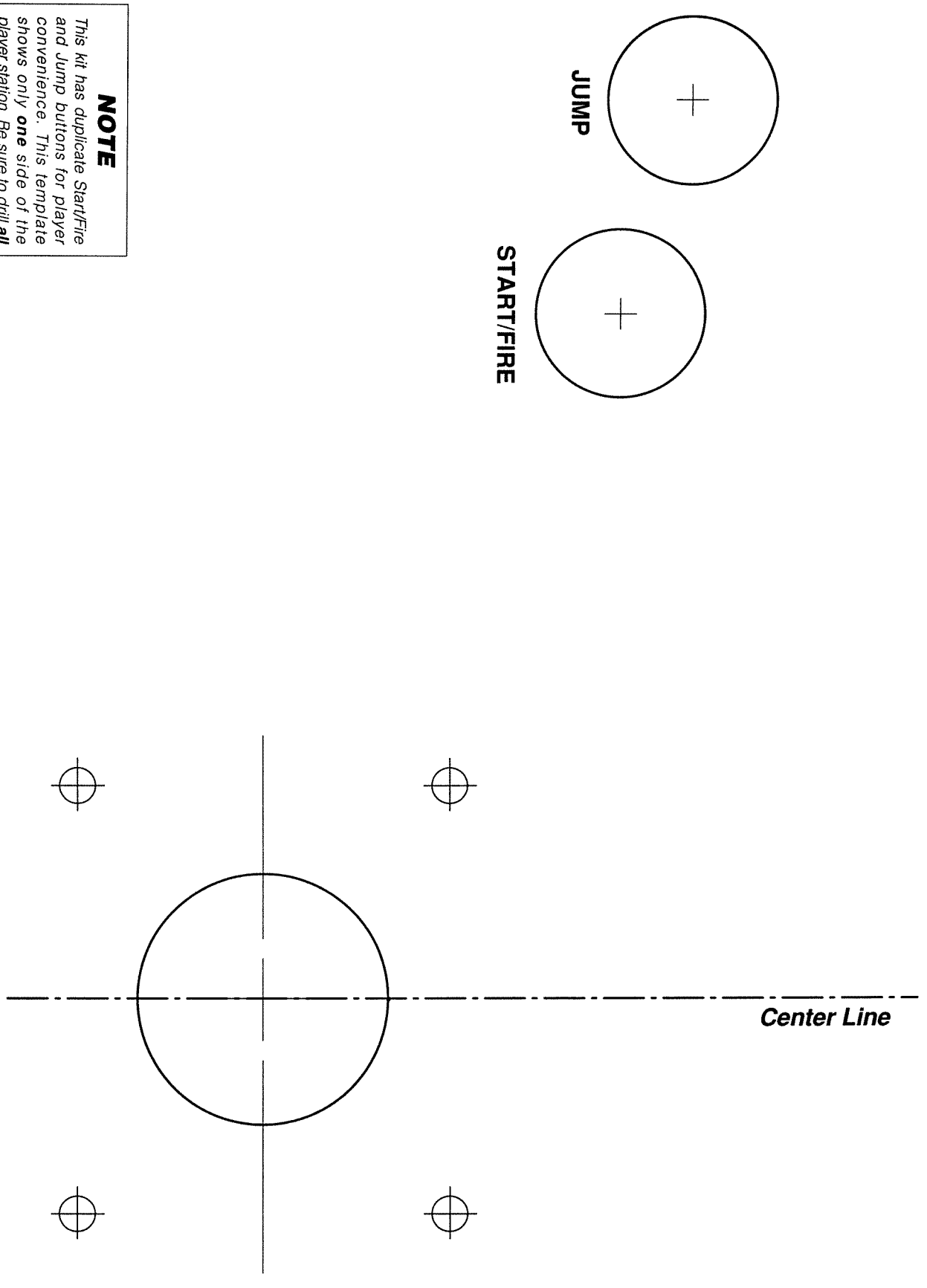

Figure 1-3 Control Panel Template

NOTES

CHAPTER 2

Self-Test

INTRODUCTION

Use the Batman™ self-test to check the condition of the game circuitry and controls. You will see the self-test information on the video display and hear the sound test information through the speakers. You do not need any additional equipment to perform the self-test. ■ You should perform the self-test when you first set up the game, each time you collect the money, or when you suspect game failure. ■ This chapter shows the screens in the self-test and explains each of the tests. The screens and explanations are arranged in the order they appear in the self-test. Table 2-1 lists all of the self-test screens and their purposes.

Entering and Exiting the Self-Test

To enter the self-test, turn on the self-test switch either on the game PCB or the JSA III (audio) PCB. Exit the self-test by turning off the self-test switch.

Figure 2-1 Self-Test Menu Screen

Select Test Menu

Choose which test or screen you want to see from this menu, shown in Figure 2-1. Move up and down the list by moving the joystick up or down; you can also press the JUMP button. The corresponding test is highlighted in white. Choose the screen by pressing the FIRE button.

Adjust Volume

The JSA III (audio) board in this game has no volume control. Instead, use this screen to adjust the volume level for both the attract mode and game play. As long as this screen is displayed, the game music plays continuously to allow you to adjust the sound. The 32 white strips progressively fill in with green as you move the joystick to the right or up to increase the volume.

Statistics

Use the information shown on the statistics screen, in Figure 2-2, and on the histogram screens to keep track of your game use and maximize your profits. Record the information on the Batman statistics page in the back of this manual. The statistics are collected from the last time the statistics were cleared. Follow the instructions at the bottom of the screen to clear the statistics. Press the FIRE button to leave this screen and go to the histograms.

Table 2-1 Summary of All Self-Test Screens

Screen	Use or Purpose	Screen	Use or Purpose
Adjust Volume	To set the game volume.	***Motion Object Test***	To check the movement and color of game objects.
Statistics	To display the game statistics.	***Alphanumeric Test***	To check the condition of the alphanumerics.
Game Options	To set and check the game option settings.	***Monitor Tests***	
Coin Options	To set and check the coin option settings.	**Color Test**	To check the video display color circuits.
Sound Board Test	To check the audio circuits.	**Purity Test Screen**	To check the red, green, blue, white, and grey purity.
Switch Test	To test the player controls (button and joystick switches).	**Convergence Test**	*White Screen:* To check and adjust video display convergence of red, blue, and green. *Violet Screen:* To check and adjust video display convergence of red to blue. *Green Screen:* To check and adjust video linearity across the face of the picture tube.
Complete RAM Test			
Video RAM (looping)	To check the video RAM.		
Color RAM (looping)	To check the color RAM.		
Program RAM (looping)	To check the program RAM.		
All RAM (re-start)	To check all RAM.		
Complete ROM Test	To check the program ROMs.		
Dual Playfield Test	To check the playfield circuits.		

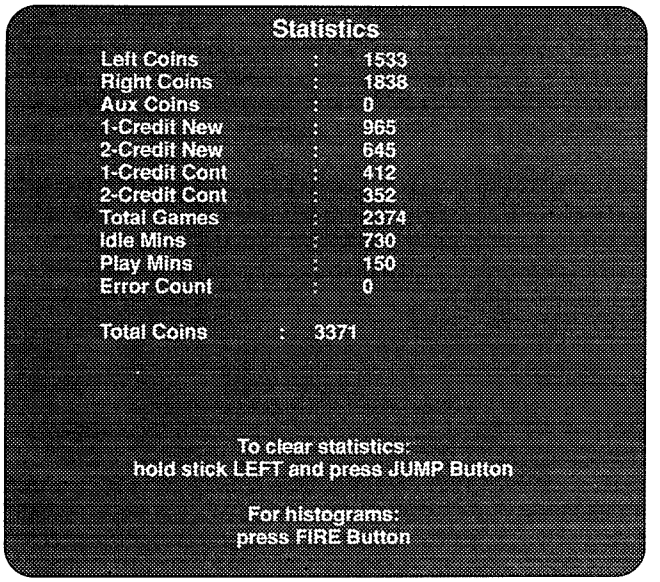

Figure 2-2 Statistics Screen

The following explains the information shown on the statistics screen:

- *Left Coins* show the number of coins counted in the left coin mechanism.
- *Right Coins* show the number of coins counted in the right coin mechanism.
- *Aux Coins* shows the number of coins counted on the auxiliary coin input.
- *1-Credit* and *2-Credit New Games* shows the number of new games played after being given 1 or 2 credits.
- *1-Credit* and *2-Credit Cont Games* shows the number of continued games played after being given 1 or 2 credits.
- *Total Games* is the number of games played.
- *Idle Mins* is the number of minutes the game was not being played.
- *Play(ed) Mins* is the number of minutes the game was being played.
- *Error Count* shows the number of errors counted in the erasable memory. If you have an error count, the statistics may be wrong. If you consistently have errors counted for several weeks, replace the EEROM at 12R.
- *Total Coins* is the number of coins inserted into all coin mechanisms.

The four histogram (bar graph) screens are shown after the statistics screen. The mean time for each histogram is highlighted in red. The histograms are:

- New 1-credit game times in seconds
- New 2-credit game times in seconds
- 1-credit continued game times in seconds
- 2-credit continued game times in seconds

Game Options

Check and select the game options on this screen, shown in Figure 2-3.

To move through the options, move the joystick up or down. Change the option highlighted in red. The factory default settings are shown in green type. To change a setting, move the joystick right or left. To save the new settings, press the FIRE button. This returns you to the Select Test menu. If you want to keep

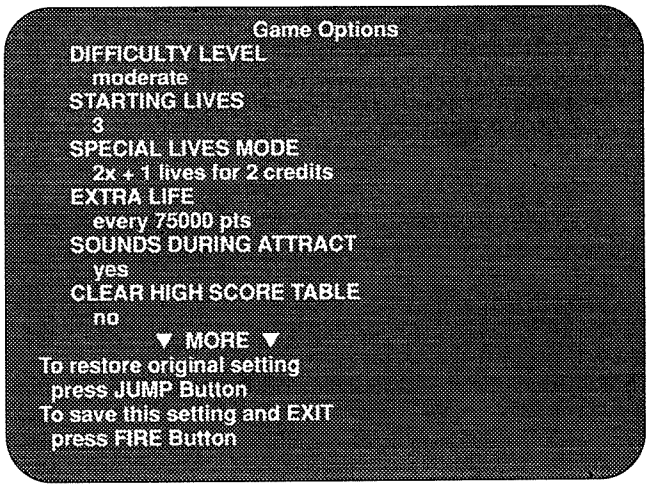

Figure 2-3 Game Options Screen

the original setting, although you have changed it, press the JUMP button. This brings back the original setting. Use the FIRE button to exit.

The game option settings with factory defaults are shown in Table 2-2.

Coin Options

Check and select the coin options on this screen, shown in Figure 2-4.

To move through the options, move the joystick up or down. Change the option highlighted in red. The factory default settings are shown in green type. To change a setting, move the joystick right or left. To save the new settings, press the FIRE button. This returns you to the Select Test menu. If you want to keep the original setting, although you have changed it, press the JUMP button. This brings back the original setting. Use the FIRE button to exit.

Table 2-2 Game Option Settings

Option	Settings		Explanation
Difficulty Level	Easy Hard	Moderate ✔ Hardest	Lets you adjust the game difficulty: harder games have more enemies and the enemies move and shoot faster.
Starting Lives	2, 3 ✔, 4, 5		Lets you adjust the number of lives that players can start a game with.
Special Lives Mode	2× + 1 life for 2 credits ✔ 2× + 2 lives for 2 credits 2× + 3 lives for 2 credits None		Lets you determine how many "bonus" lives to grant if a player pays for two credits at the beginning of a game.
Extra Life	Every 50,000 points Every 75,000 points ✔ Every 100,000 points No extra lives		Lets you determine whether and when extra lives are granted.
Sounds During Attract	Yes ✔	No	Lets you choose whether the Batman music is played during the attract mode.
Clear High Score Table	No ✔	Yes	Lets you clear the high score table.
Auto Clear High Score Table	Yes ✔	No	Automatically resets the high scores to the factory defaults after 2000 games, unless a player has entered his initials within the previous 200 games.
FBI Screen	Yes ✔	No	Periodically displays the Federal Bureau of Investigation emblem and the message "Winners Don't Use Drugs" in the attract mode. If this game is used outside of the U.S., you should set this option to *No.*
Restore Factory Options	No ✔	Yes	Lets you set all the game options to the factory options or lets you use your own settings. Make sure you set this to *no* to use your own settings.

✔ *Manufacturer's recommended settings. These settings are shown in green on the screen.*

The coin option settings and factory defaults are explained in Table 2-3.

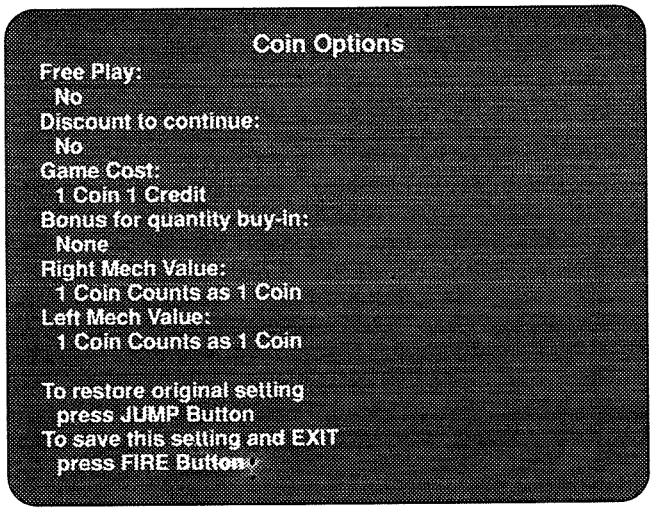

Figure 2-4 Coin Options Screen

Sound Board Test

The sound test indicates the condition of the audio circuits on the JSA II (audio) PCB. This test also checks the coin mechanism switches. The sound test screen appears in Figure 2-5.

Use the joystick to select the sound, and press the FIRE button to listen to it. Press the JUMP button to stop all sounds. Simultaneously pressing the FIRE and JUMP buttons returns you to the Select Test menu.

Switch Test

The controls test screen is shown in Figure 2-6. Test the control panel buttons and the joystick. As you press the buttons, the name is highlighted in grey on the screen. Because the two buttons on one side of the joystick are wired in parallel to the other two buttons, both sets of buttons should highlight the appropriate name on the screen.

Table 2-3 Coin Option Settings

Option	Settings	Explanation
Free Play	No ✔ Yes	Set this to "Yes" for demonstrating the game.
Discount to Continue	No ✔ Yes	Lets you offer a reduced price per credit when players want to continue a game.
Game Cost	1 coin 1 credit ✔ 2 coins 1 credit ... 8 coins 1 credit	Sets the number of coins required for one credit.
Bonus for Quantity Buy-in	None ✔ 2 coins give 1 (extra coin) 3 coins give 1 (extra coin) 3 coins give 2 (extra coins) 4 coins give 1 (extra coin) 4 coins give 2 (extra coins) 4 coins give 3 (extra coins) 5 coins give 1 (extra coin) 5 coins give 2 (extra coins) 5 coins give 3 (extra coins) 6 coins give 1 (extra coin) 6 coins give 2 (extra coins) 6 coins give 3 (extra coins) 7 coins give 1 (extra coin) 7 coins give 2 (extra coins) 7 coins give 3 (extra coins) 8 coins give 1 (extra coin) 8 coins give 2 (extra coins) 8 coins give 3 (extra coins) 9 coins give 1 (extra coin) 9 coins give 2 (extra coins) 9 coins give 3 (extra coins)	Lets you choose various levels of bonus coins or no bonus.
Right Mech Value	1 coin counts as 1 coin ✔ ... 8 coins count as 1 coin	Is the number of coins each coin counts as in the right coin mechanism.
Left Mech Value	1 coin counts as 1 coin ✔ ... 8 coins count as 1 coin	Is the number of coins each coin counts as in the left coin mechanism.

✔ *Manufacturer's recommended settings. These settings are shown in green on the screen.*

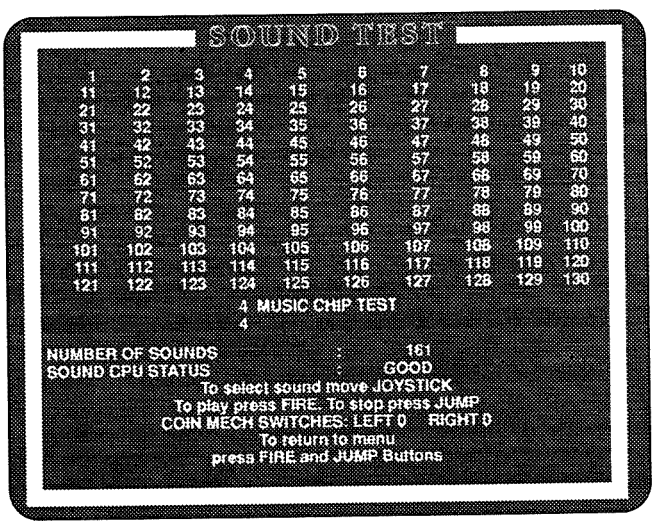

Figure 2-5 Sound Test Screen

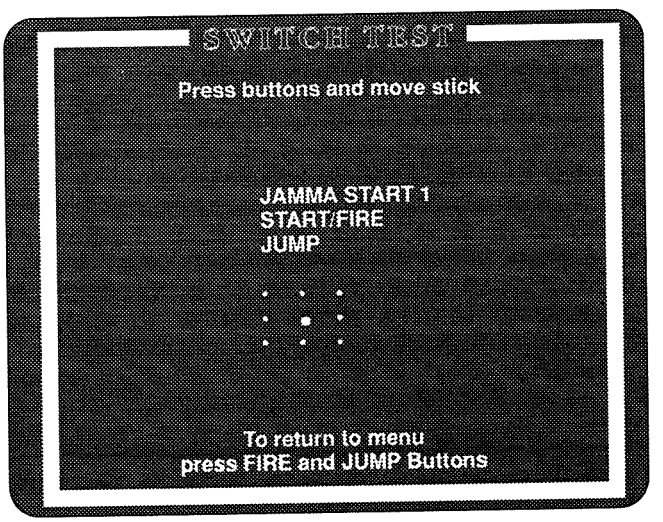

Figure 2-6 Switch Test Screen

If the name is not highlighted, check the connections, switches, and mechanism. Simultaneously press the JUMP and FIRE buttons to return to the Select Test menu.

Moving the joystick causes one of the nine large white dots to appear when you move the handle up, down, left, right, or to one of the four diagonal points. If you are installing a new joystick, use these markers to help you correctly orient the control. If the dots on the screen do not appear, check the joystick connectors, switches, and harness for that direction of movement. See Table 3-1 for more troubleshooting suggestions.

Complete RAM Test

Use this selection screen, shown in Figure 2-7, to choose which RAM test you want to perform. Use the different tests according to Table 2-4.

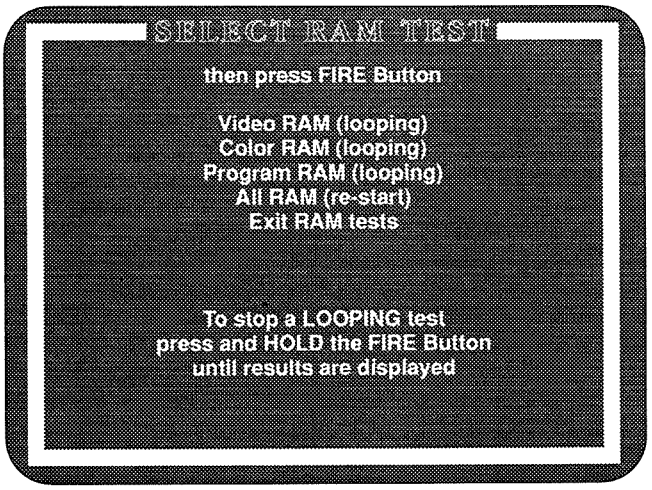

Figure 2-7 RAM Test Menu

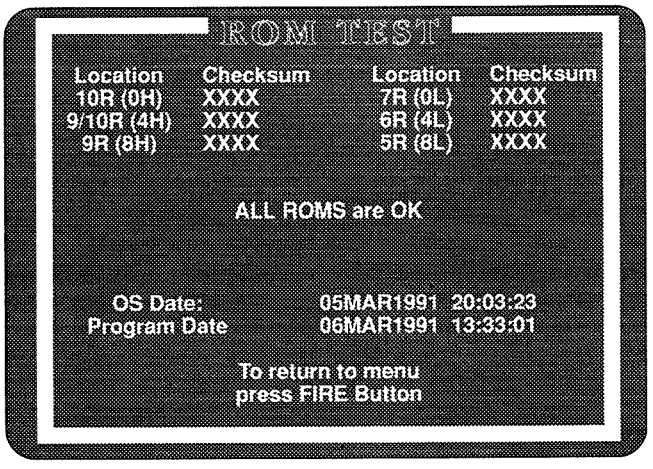

Figure 2-8 Complete ROM Test Screen

If you see an error in any of the RAM tests, the game may display the location of the bad RAM. If you see a screen of "garbage", press the START button. If is displays *COLOR RAM BAD (6A–6B)*, replace those chips. If is just continues to display garbage, the error is probably in the video RAM.

Press and hold the FIRE button to leave the individual RAM test and return to the Select RAM Test menu. To return to the Select Test menu, choose *Exit RAM tests* and press the FIRE button once more.

Complete ROM Test

The ROM test screen is shown in Figure 2-8. The checksum information appears. If the game has no ROM errors, you see the message *ALL ROMS are OK.*

If the game does have ROM errors, the location of the bad ROMs will be displayed.

See Table 2-5 for the locations of the ROM errors. *Note: The OS (operating system) and program dates may not match those shown in Figure 2-8.* Press the FIRE button to return to the Select Test menu.

Dual Playfield Test

This test, shown in Figure 2-9, checks the transparency, movement, and color of various objects on both playfields. Move the foreground playfield up, down, left, and right with the joystick.

If you hold down the FIRE button while using the joystick, the *background* playfield should move in all four directions. If you press the JUMP button and move the joystick up or down, you will bring the rear playfield to the front, and send the front playfield to the rear. If you press the JUMP button and move the joystick left and right, you will bring a new picture to the front and rear playfields.

Simultaneously press the FIRE and JUMP buttons to go to the Select Test menu.

Table 2-4 When to Run the RAM Tests

Problem	Type of Test	Location of RAMs Tested
Playfield is erratic or looks wrong	Video RAM	8E, 8J
Motion objects are not working properly or game play is erratic.	Video RAM	8E, 8J
Colors look wrong.	Color RAM	6A, 6B

Table 2-5 Bad ROM Locations by Error Address

Error Address	ROM Location High	Error Address	ROM Location Low
Program ROM 8x1024 Configuration:			
0K-H	10R	0K-L	7R
40K-H	9/10R	40K-L	6R
80K-H	9R	80K-L	5R

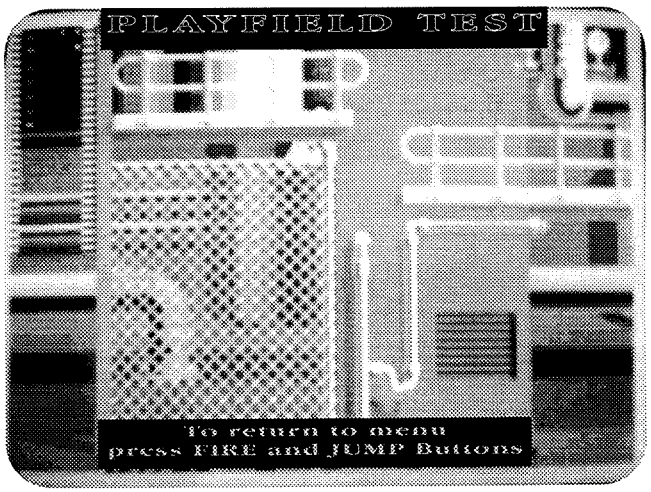

Figure 2-9 Playfield Test Screen

Motion Object Test

The motion object test screen, shown in Figure 2-10, tests the movement and color of various game objects.

Select the test function with the JUMP button. Use the joystick to move objects, change pictures, change object size, change object palette, and to toggle the horizontal flip.

Simultaneously press the JUMP and FIRE buttons to go to the Select Test menu.

Alphanumeric Test

This test indicates the condition of the alphanumerics in the game. Bank 0, which shows the full character set, is displayed first. Press the JUMP button repeatedly to display Banks 1 through 7 of the alphanumerics. If you see an error on the screen, check the EPROM at 10M.

Monitor Tests

When you enter this test, you see a menu of three choices, plus an *Exit Menu* selection. Each of the monitor tests is explained below.

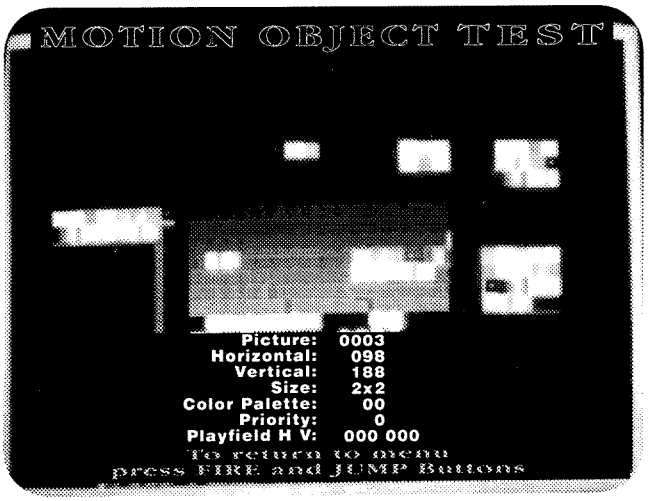

Figure 2-10 Motion Object Test Screen

Color Test

This test indicates the dynamic range of the video display color circuit. The screen is shown in Figure 2-11.

The screen should be white, red, green, and blue from top to bottom, each with a color scale from dark to bright, left to right. If the screen does not match this description, adjust the video display as described in the video display manual.

In addition, you can use the joystick to move a thin horizontal band that "stains" or inverts the video level of whatever area it is positioned over. Pressing the FIRE button toggles the screen between 32 and 64 color levels. Pressing the JUMP button alternately removes and shows the border, horizontal band, and text.

Return to the Select Monitor Test menu by simultaneously pressing the FIRE and JUMP buttons.

Purity Test

The color purity test has five screens. Each screen is a solid rectangle of color. The first screen is red. The other screens, which you can see by pressing the JUMP button, are green, blue, white, and gray.

These screens show the adjustment of the color purity of the video display. Each screen should display a rectangle of color, with no curving at the corners, no unevenness of color, and no lines in the display.

If the screens are not correct, adjust the video display as described in the video display manual.

Return to the Select Monitor Test menu by pressing the FIRE button.

Convergence Test

The convergence test has three screens: first white, then violet, and finally green. The white screen is

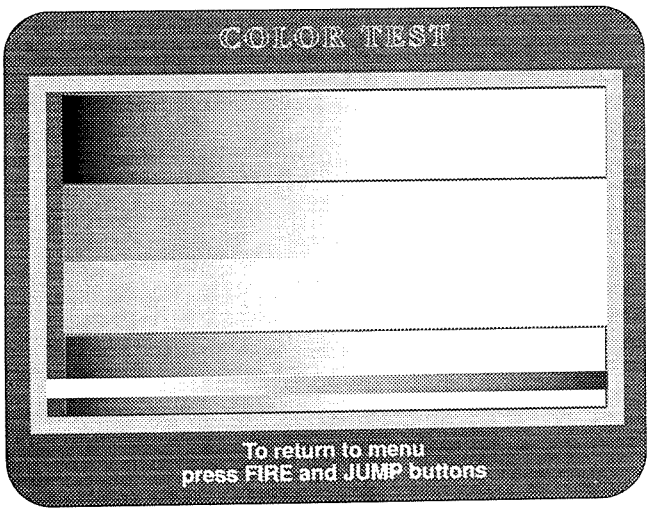

Figure 2-11 Color Test Screen

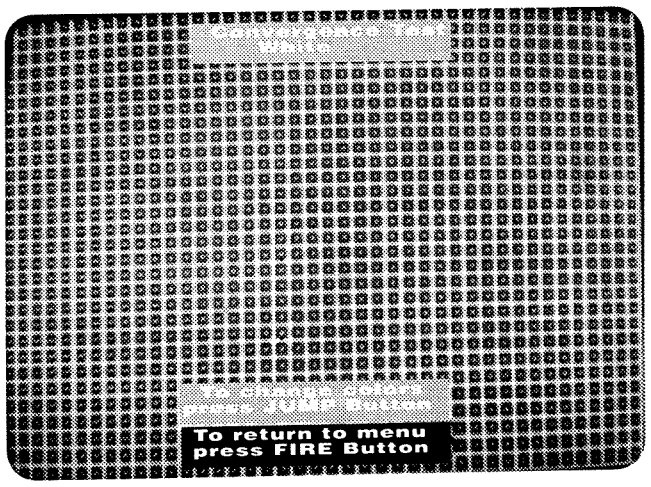

Figure 2-12 Convergence Test Screen

shown in Figure 2-12. To see the violet and green screens, press the JUMP button. Press the FIRE button to go to the Select Monitor Test menu.

Check the following on the screens:

- The grid lines should be straight within 3 mm, and the lines should not pincushion or barrel.
- The convergence of the lines on the violet and white screens should be within 2 mm.

If these screens do not meet these criteria, adjust the video display as described in the video display manual.

CHAPTER 3

Troubleshooting and Maintenance

INTRODUCTION

This chapter contains troubleshooting tables and repair procedures for your Batman™ game. The chapter has two parts. The first part contains three troubleshooting tables. The tables contain general troubleshooting information, the voltage levels and test points on the game printed-circuit board, and a list of ROM-caused problems, with specific ROMs to check and replace. ■ The second part of this chapter has information about the 8-Position Joystick Assembly.

Table 3-1 Troubleshooting Table

Problem	Suggested Action
Coin Mechanism Problem	1. Check the wiring to the coin mechanism. 2. Check the voltage to the + side of the mechanism. 3. Test the coin mechanisms with the sound test screen in the self-test.
Game Play Problem	1. Check the harness and connectors. 2. Perform the self-test. 3. Check the voltage levels on the PCB. See Table 3-2, *Voltage Inputs and Test Points.* 4. Check *What ROM Problems Look Like,* Table 3-3, for specific ROM problems.
Joystick Problem	1. Has the joystick been lubricated with white lithium grease? If not, lubricate it. 2. Check the harness and connectors. 3. Check the switches on the joystick. 4. If you took the joystick apart, have you reassembled it correctly? 5. Make sure all the parts on the joystick are in good repair. Repair or replace parts.
Sound Problem	1. Is the speaker volume turned up? If not, increase the volume by using the first self-test screen *(Adjust Volume).* 2. Check the voltage on the JAMMA connector. 3. Check the wiring from the PCB to the speaker. 4. Check the voltage level to the PCB. See Table 3-2, *Voltage Inputs and Test Points.* 5. Replace the speaker.
Video Display Problem	
Sync problems.	Does your display need separate positive sync? See the *Video Display Sync Problems* section in this chapter.
Screen is dark.	1. Is the game plugged in? 2. Is the game turned on? 3. Are the connections good? 4. Is the line fuse good? 5. Is the display brightness turned up? 6. Are the solder connections on the line filter and transformer good? 7. Is the JAMMA connector on the PCB tightly connected? 8. Check all of the items below. If you answer "no" to any question, you have a problem with the video display, not with the game circuitry. See your video display service manual. a. Do you have power to the video display? b. Are the video display's filaments lit? c. Do you have high voltage to the video display? 9. Are the voltage levels to the video display PCB correct? (Power voltage is 100 VAC or 110 VAC, depending on the type of video display. Video signal voltage is 0.5 to 3.5 Volts.) 10. If the level is not correct, check the connectors and the harness.
Display area wavers or is too small.	1. Do you have correct power voltage to the video display PCB? 2. Do you have correct high voltage to the video display?
Picture is wavy.	1. Is the video ground connected to the display? 2. Are the sync inputs connected properly? Does your monitor need a separate positive sync? See the *Video Display Sync Problems* section in this chapter.
Picture is upside down.	Switch the horizontal or vertical yoke wires on the display.
Convergence, purity or color problems.	Use the screens in the self-test to adjust the video display. Use the adjustment procedures in your video display manual.
Picture is not centered.	Use the centering procedures in your video display manual.

Table 3-2 Voltage Inputs and Test Points on the PCBs

Voltage	Test Point or LED	Source and Purpose
+5 ± 0.25 VDC	+5V1 on Batman Game PCB	Logic power from the switching power supply.
	CR3 LED on Batman Game PCB	Lights up when 5 V is applied to the PCB and the reset (RST) jumper is open.
+12V	CR9 LED on JSA III PCB	Lights up when the +12 V supply is good.
–5V	CR3 LED on JSA III PCB	Lights up when the –5 V supply is good.

Table 3-3 What ROM Problems Look Like

Problem	ROM Causing the Problem	Check the ROMs at:
Program works, but the motion objects or playfield are wrong.	Graphics	13C, 13F, 13M, 13R, 14C, 14F, 14M, 14R, 15C, 15F, 15M, 15R, 16C, 16F, 16M, or 16R on the Batman Game PCB
Garbage on screen; program doesn't work. or game program is erratic.	Processor Program ROM	6L/M on the Batman Game PCB 5R, 6R, 7R, 9R, 9/10R, or 10R on the Batman Game PCB
No sound or erratic sound.	Audio ROM: Audio ADPCM	12C, 12E, 15E, 17E, or 19E on the JSA III PCB

Before you begin troubleshooting, be sure to check Table 3-1 to narrow down the cause of a problem. If you can measure voltages, refer to Table 3-2 for a list of all important voltages in this game and where to test them.

Joystick Control

The joystick control is shown in Figure 4-2. If you have trouble with the joystick, make sure you have assembled it properly. Refer to the instructions included with the joystick or see Figure 4-2.

If you need to repair the joystick control, first remove it from the control panel. Disassemble it by removing the retaining ring at the bottom of the shaft. To replace any of the four switches, remove the two screws that secure each switch.

ROMs and RAMs

If you have think you have bad ROMs or RAMs, first perform the ROM or RAM test in the self-test procedure. If you have a ROM problem, see Table 3-3

Video Display Sync Problems

This game board provides separate positive horizontal and vertical sync on a separate connector, for those monitors that will not work with the comp negative sync signal provided at the JAMMA edge connector.

This connector (labeled "Sync") is located near the edge connector. Pin 1 is horizontal sync, Pin 2 is vertical sync, and Pin 3 is ground.

NOTES

CHAPTER 4

Parts Illustrations

INTRODUCTION

This chapter provides information you need to order replacement parts for your kit. Common hardware parts, such as screws, nuts, washers, and so on, are included in these parts illustrations. When you order parts, give the part number, part name, the number of this manual, and the serial number of your game. ■ With this information, we can fill your order rapidly and correctly. We hope this will create less down-time and more profit from your games. Atari Games Customer Service phone numbers are listed on the inside front cover of this manual.

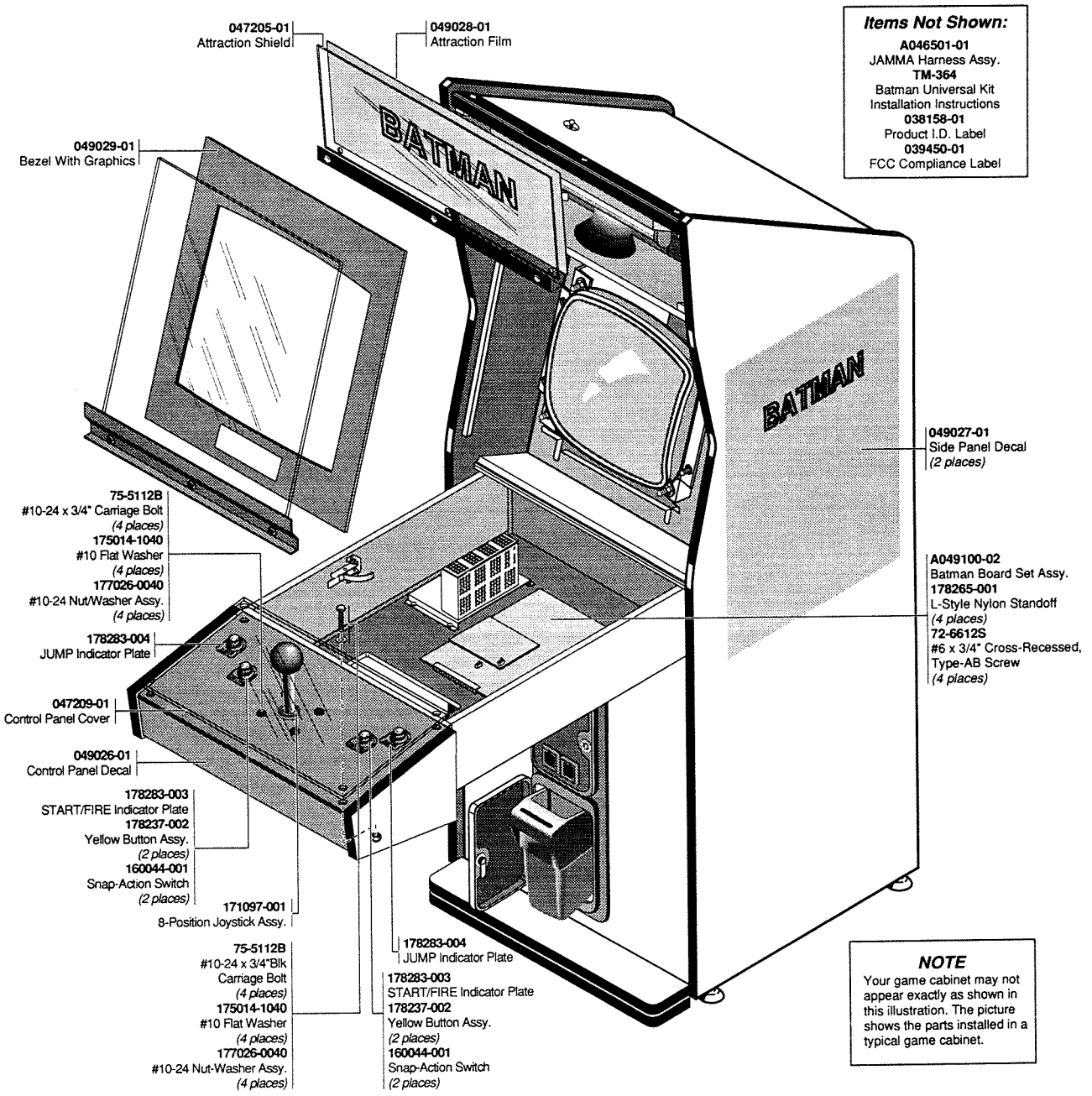

Figure 4-1 Parts for Batman Universal Kit
A049035-01 B

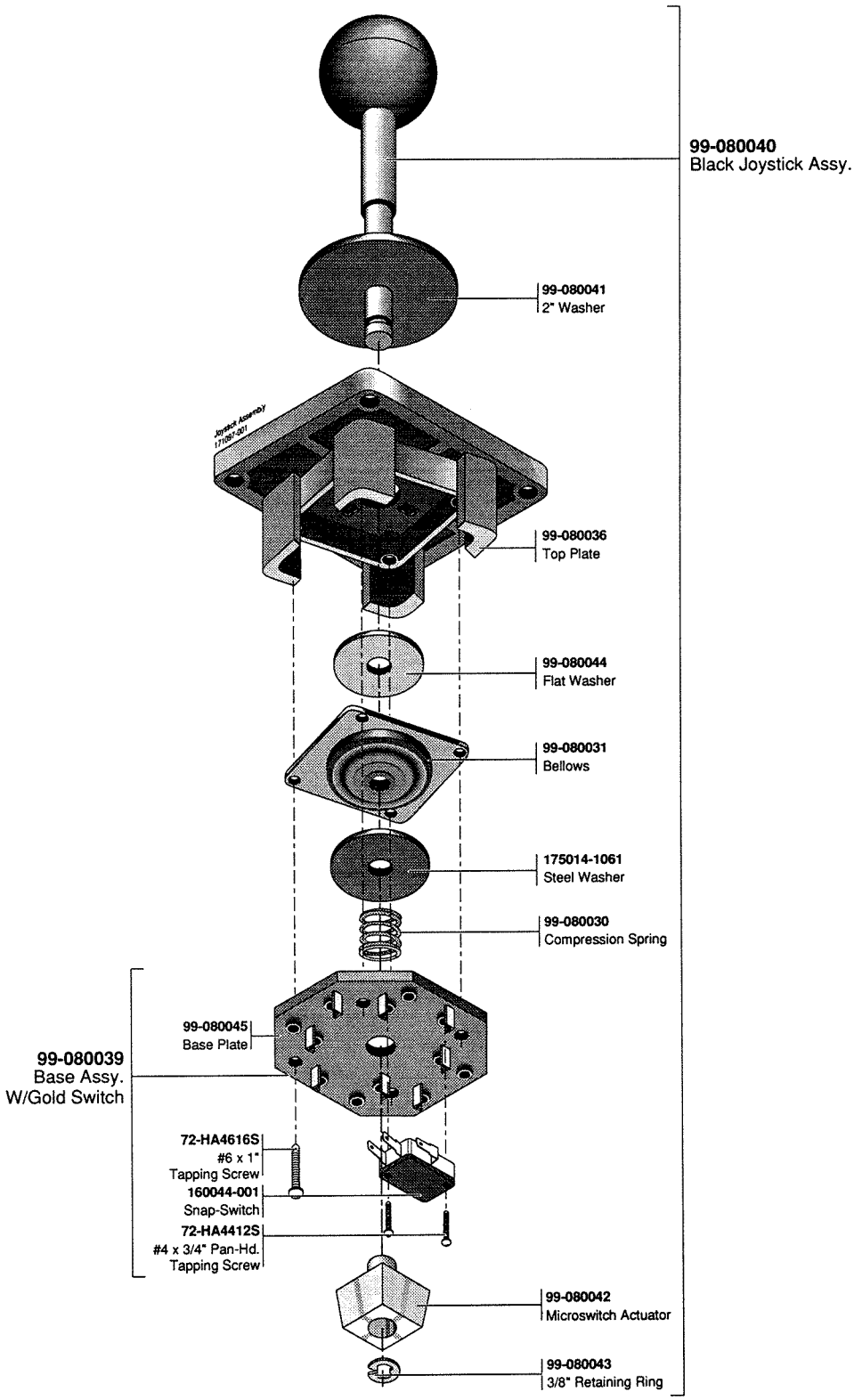

Figure 4-2 Joystick Assembly 171097-001

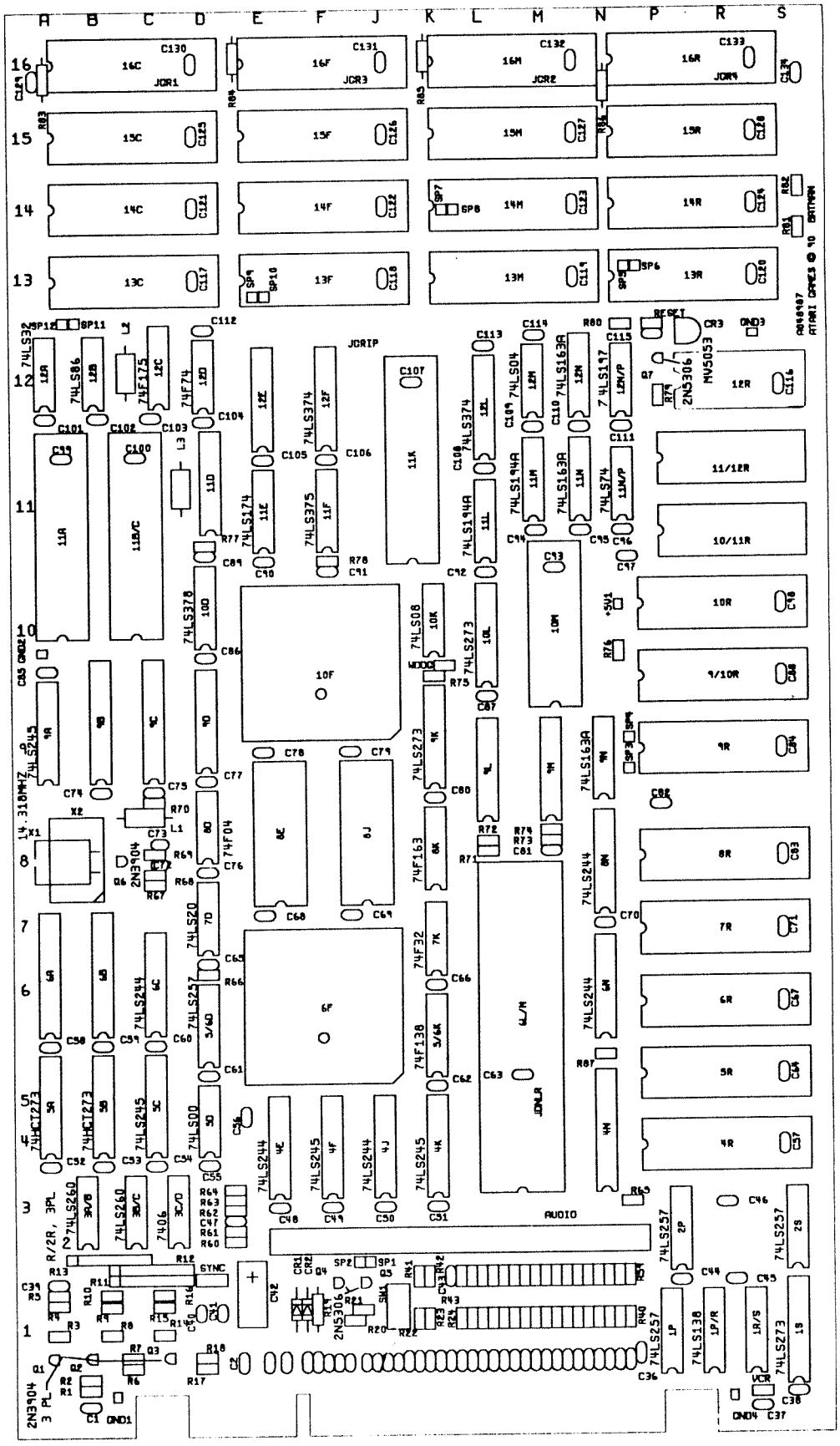

Figure 4-3 Batman Game PCB Assembly
A048987-01 B

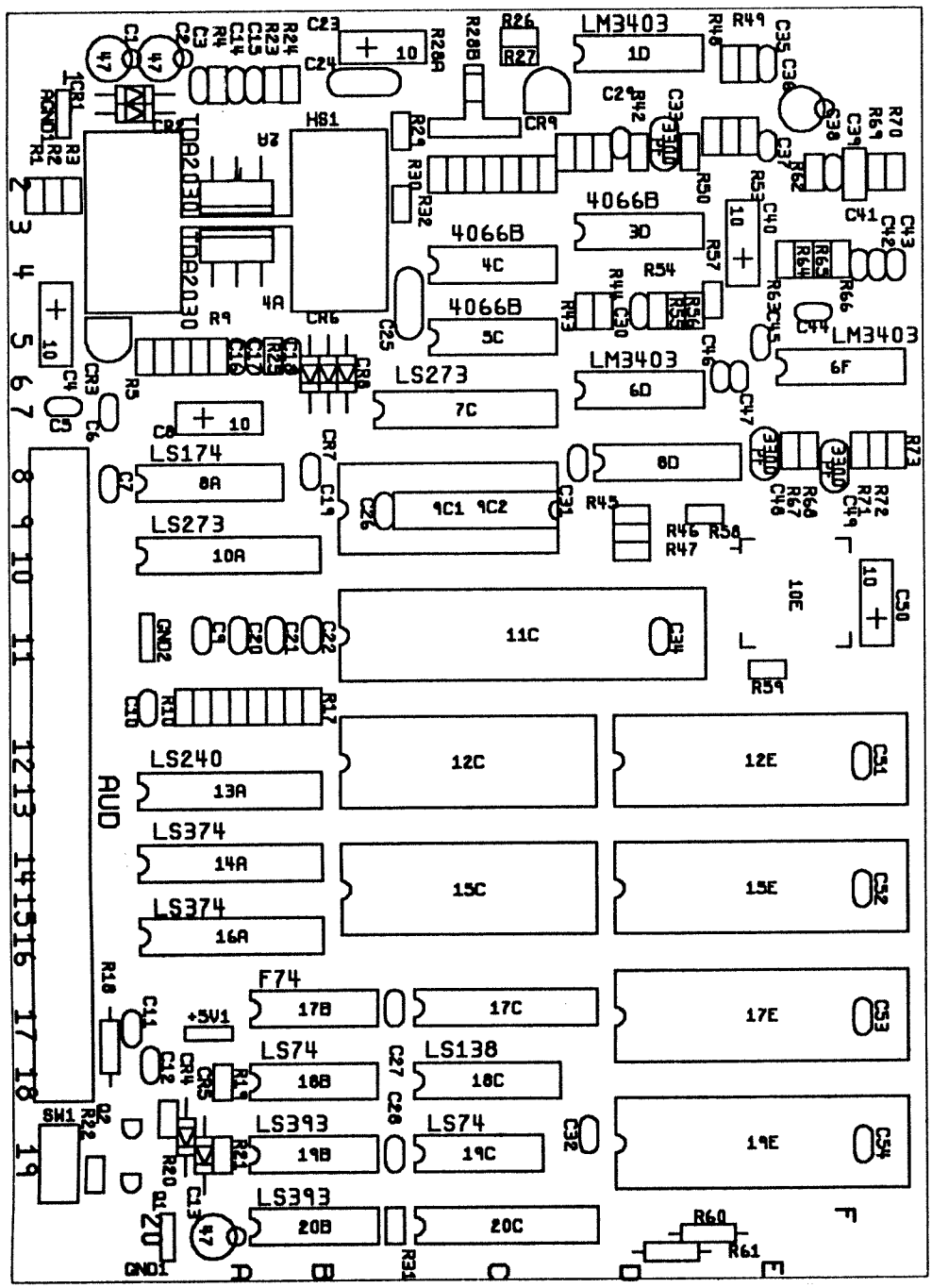

Figure 4-4 JSA III PCB Assembly
A048974-01 A

NOTES

CHAPTER 5

Schematic Diagrams

INTRODUCTION

This chapter contains the schematic diagrams for your Batman™ game printed-circuit board (PCB) and JSA (Audio) III PCB. The PCB *assembly drawings* are illustrated in Chapter 4, Parts Illustrations.

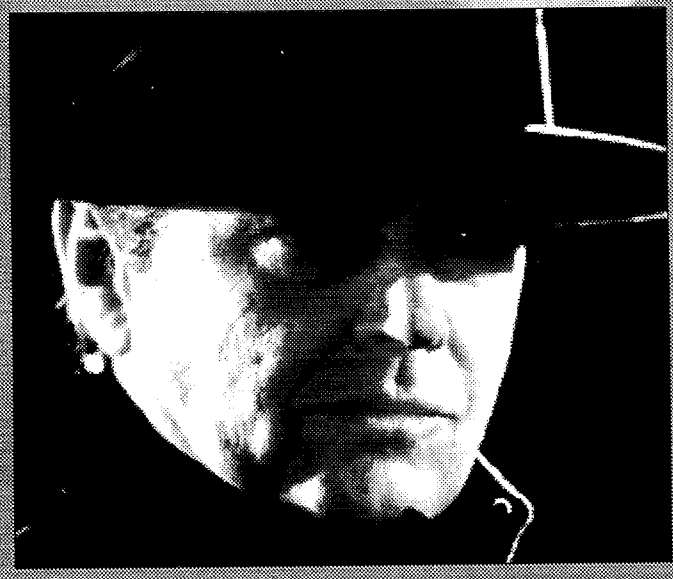

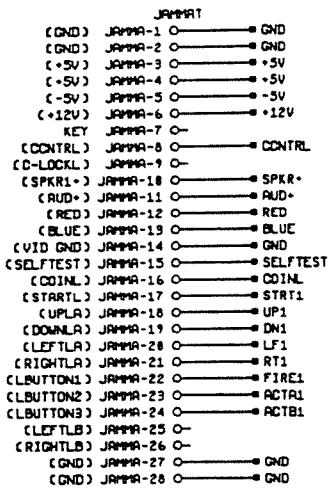
JAMMA1
(GND) JAMMA-1 GND
(GND) JAMMA-2 GND
(+5V) JAMMA-3 +5V
(+5V) JAMMA-4 +5V
(-5V) JAMMA-5 -5V
(+12V) JAMMA-6 +12V
KEY JAMMA-7
(CONTRL) JAMMA-8 CONTRL
(C-LOCKL) JAMMA-9
(SPKR1+) JAMMA-10 SPKR+
(AUD+) JAMMA-11 AUD+
(RED) JAMMA-12 RED
(BLUE) JAMMA-13 BLUE
(VID GND) JAMMA-14 GND
(SELFTEST) JAMMA-15 SELFTEST
(COINL) JAMMA-16 COINL
(STARTL) JAMMA-17 STRT1
(UPLA) JAMMA-18 UP1
(DOWNLA) JAMMA-19 DN1
(LEFTLA) JAMMA-20 LF1
(RIGHTLA) JAMMA-21 RT1
(LBUTTON1) JAMMA-22 FIRE1
(LBUTTON2) JAMMA-23 ACTA1
(LBUTTON3) JAMMA-24 ACTB1
(LEFTLB) JAMMA-25
(RIGHTLB) JAMMA-26
(GND) JAMMA-27 GND
(GND) JAMMA-28 GND

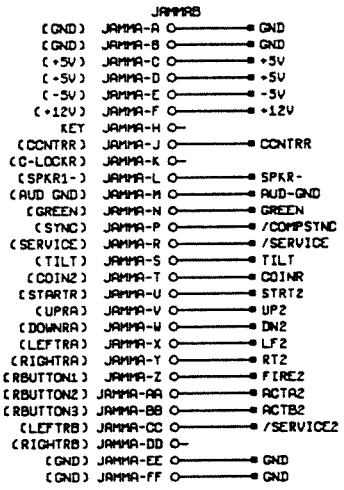
JAMMAB
(GND) JAMMA-A GND
(GND) JAMMA-B GND
(+5V) JAMMA-C +5V
(+5V) JAMMA-D +5V
(-5V) JAMMA-E -5V
(+12V) JAMMA-F +12V
KEY JAMMA-H
(CONTRR) JAMMA-J CONTRR
(C-LOCKR) JAMMA-K
(SPKR1-) JAMMA-L SPKR-
(AUD GND) JAMMA-M AUD-GND
(GREEN) JAMMA-N GREEN
(SYNC) JAMMA-P /COMPSYNC
(SERVICE) JAMMA-R /SERVICE
(TILT) JAMMA-S TILT
(COIN2) JAMMA-T COINR
(STARTR) JAMMA-U STRT2
(UPRA) JAMMA-V UP2
(DOWNRA) JAMMA-W DN2
(LEFTRA) JAMMA-X LF2
(RIGHTRA) JAMMA-Y RT2
(RBUTTON1) JAMMA-Z FIRE2
(RBUTTON2) JAMMA-AA ACTA2
(RBUTTON3) JAMMA-BB ACTB2
(LEFTRB) JAMMA-CC /SERVICE2
(RIGHTRB) JAMMA-DD
(GND) JAMMA-EE GND
(GND) JAMMA-FF GND

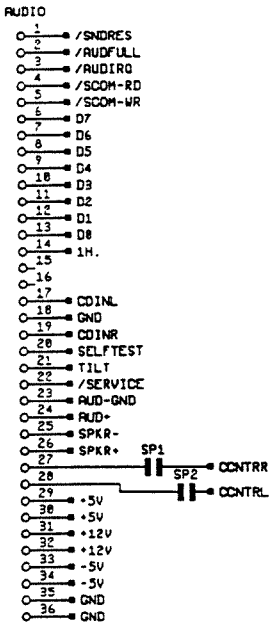
AUDIO
1 /SNDRES
2 /AUDFULL
3 /AUDIRQ
4 /SCOM-RD
5 /SCOM-WR
6 D7
7 D6
8 D5
9 D4
10 D3
11 D2
12 D1
13 D0
14 1H.
15
16
17 COINL
18 GND
19 COINR
20 SELFTEST
21 TILT
22 /SERVICE
23 AUD-GND
24 AUD+
25 SPKR-
26 SPKR+
SP1
27
SP2
28
CONTRR
CONTRL
29 +5V
30 +5V
31 +12V
32 +12V
33 -5V
34 -5V
35 GND
36 GND

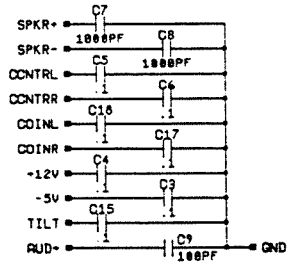
C7
SPKR+
1000PF
C8
SPKR-
C5
1000PF
CONTRL
.1
C6
CONTRR
C16
.1
COINL
.1
C17
COINR
.1
C4
+12V
.1
C3
-5V
.1
C15
TILT
.1
C9
AUD-
1000PF
GND

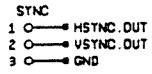
SYNC
1 HSYNC.OUT
2 VSYNC.OUT
3 GND

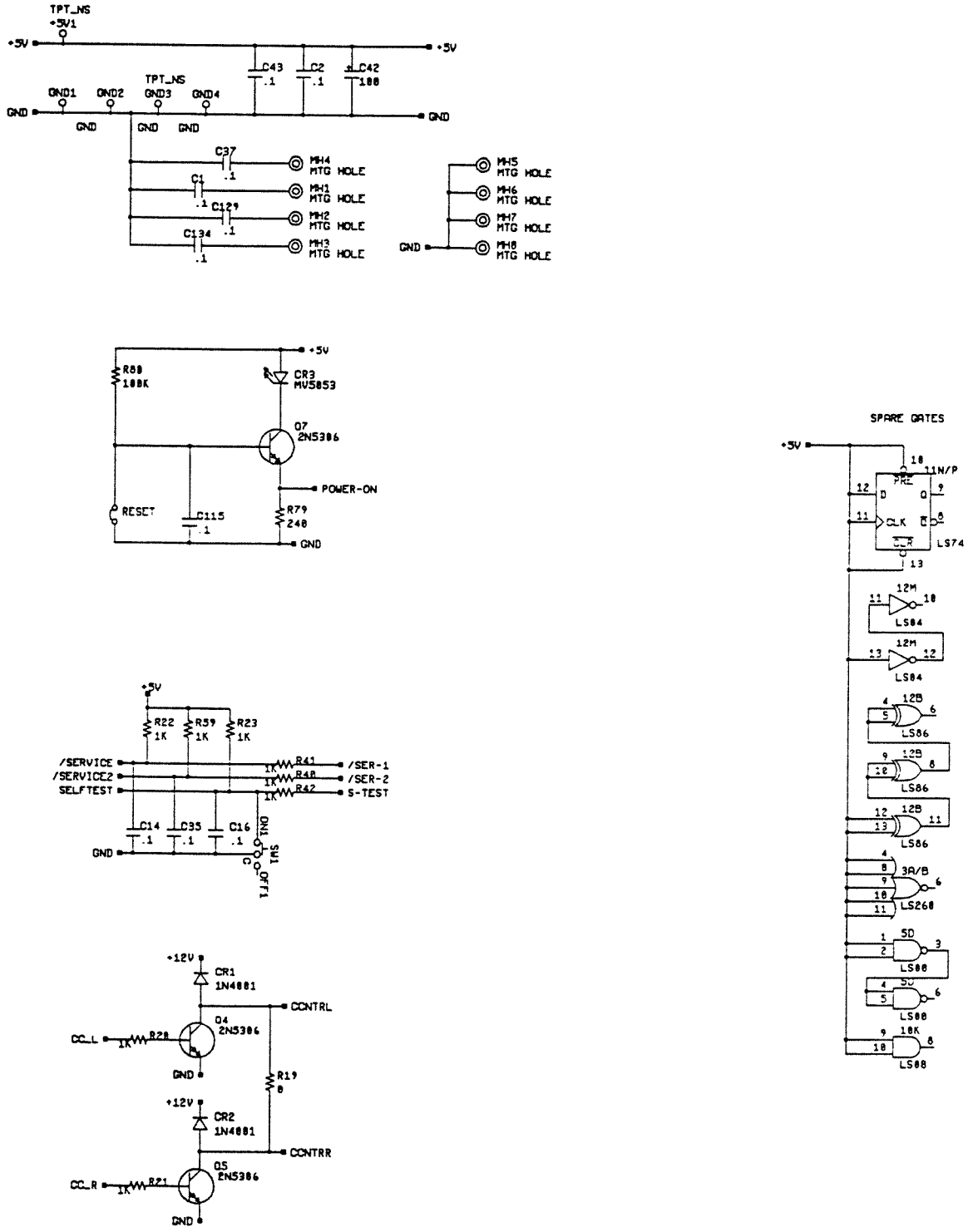

Figure 5-1 Batman Game PCB Assembly Schematic Diagram

048986-01 B

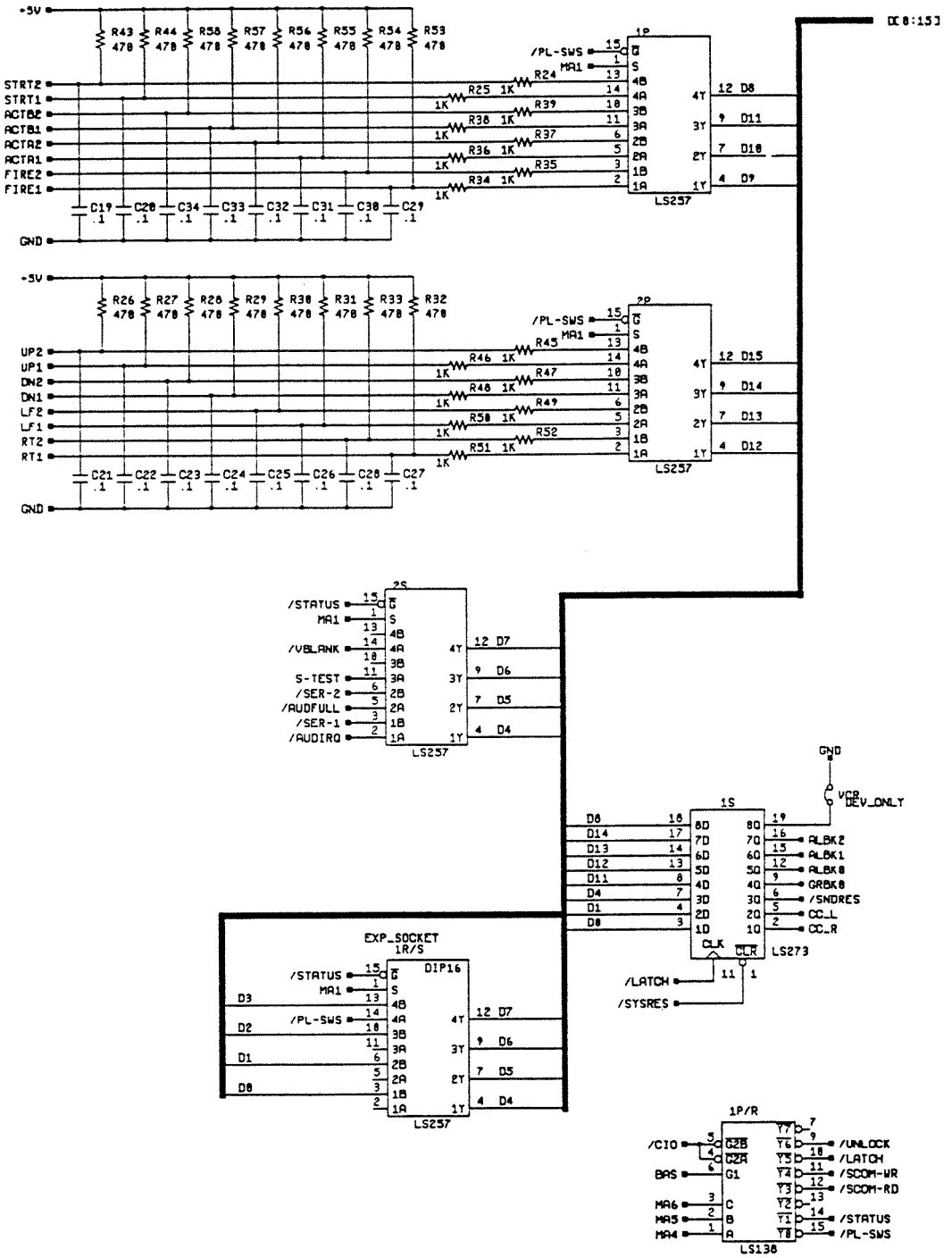
+5V
R43 470
R44 470
R58 470
R57 470
R56 470
R55 470
R54 470
R53 470
STRT2
STRT1
ACTB2
ACTB1
ACTA2
ACTA1
FIRE2
FIRE1
GND
C19 .1
C20 .1
C34 .1
C33 .1
C32 .1
C31 .1
C30 .1
C29 .1
1P
/PL-SWS
MA1
R24 1K
R25 1K
R39 1K
R38 1K
R37 1K
R36 1K
R35 1K
R34 1K
LS257
12 D8
9 D11
7 D10
4 D9
D[8:15]
UP2
UP1
DN2
DN1
LF2
LF1
RT2
RT1
R26 470
R27 470
R28 470
R29 470
R30 470
R31 470
R33 470
R32 470
C21 .1
C22 .1
C23 .1
C24 .1
C25 .1
C26 .1
C28 .1
C27 .1
2P
R45 1K
R46 1K
R47 1K
R48 1K
R49 1K
R50 1K
R52 1K
R51 1K
12 D15
9 D14
7 D13
4 D12
2S
/STATUS
MA1
/VBLANK
S-TEST
/SER-2
/AUDFULL
/SER-1
/AUDIRQ
12 D7
9 D6
7 D5
4 D4
GND
VCR_DEV_ONLY
1S
D6
D14
D13
D12
D11
D4
D1
D0
RLBK2
RLBK1
RLBK0
GRBK0
/SNDRES
CC_L
CC_R
CLK
CLR
LS273
/LATCH
/SYSRES
EXP_SOCKET
1R/S
DIP16
D3
D2
D1
D0
1P/R
/CIO
BAS
MA6
MA5
MA4
/UNLOCK
/LATCH
/SCOM-WR
/SCOM-RD
/STATUS
/PL-SWS
LS138

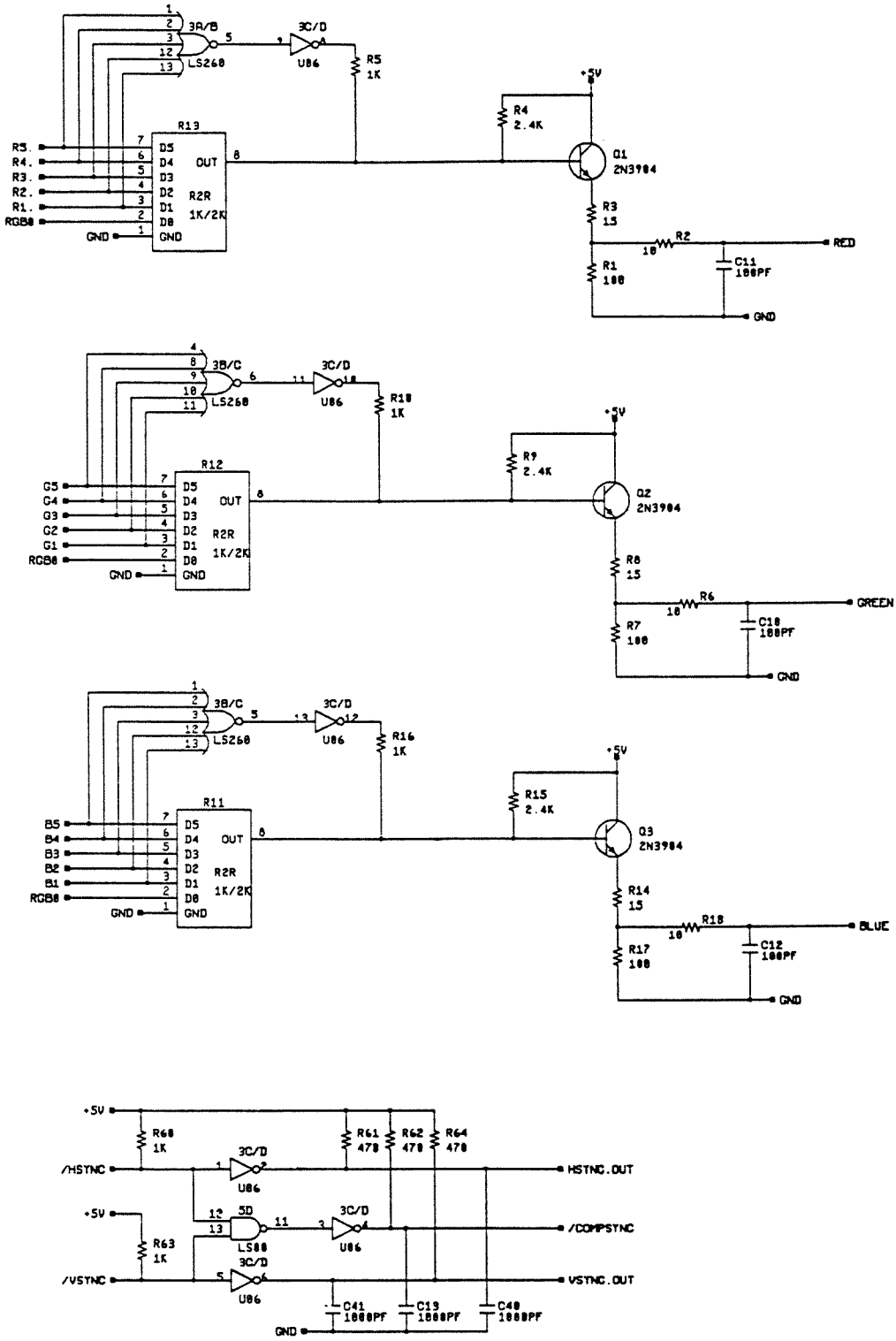

Figure 5-1 Batman Game PCB Assembly Schematic Diagram

048986-01 B

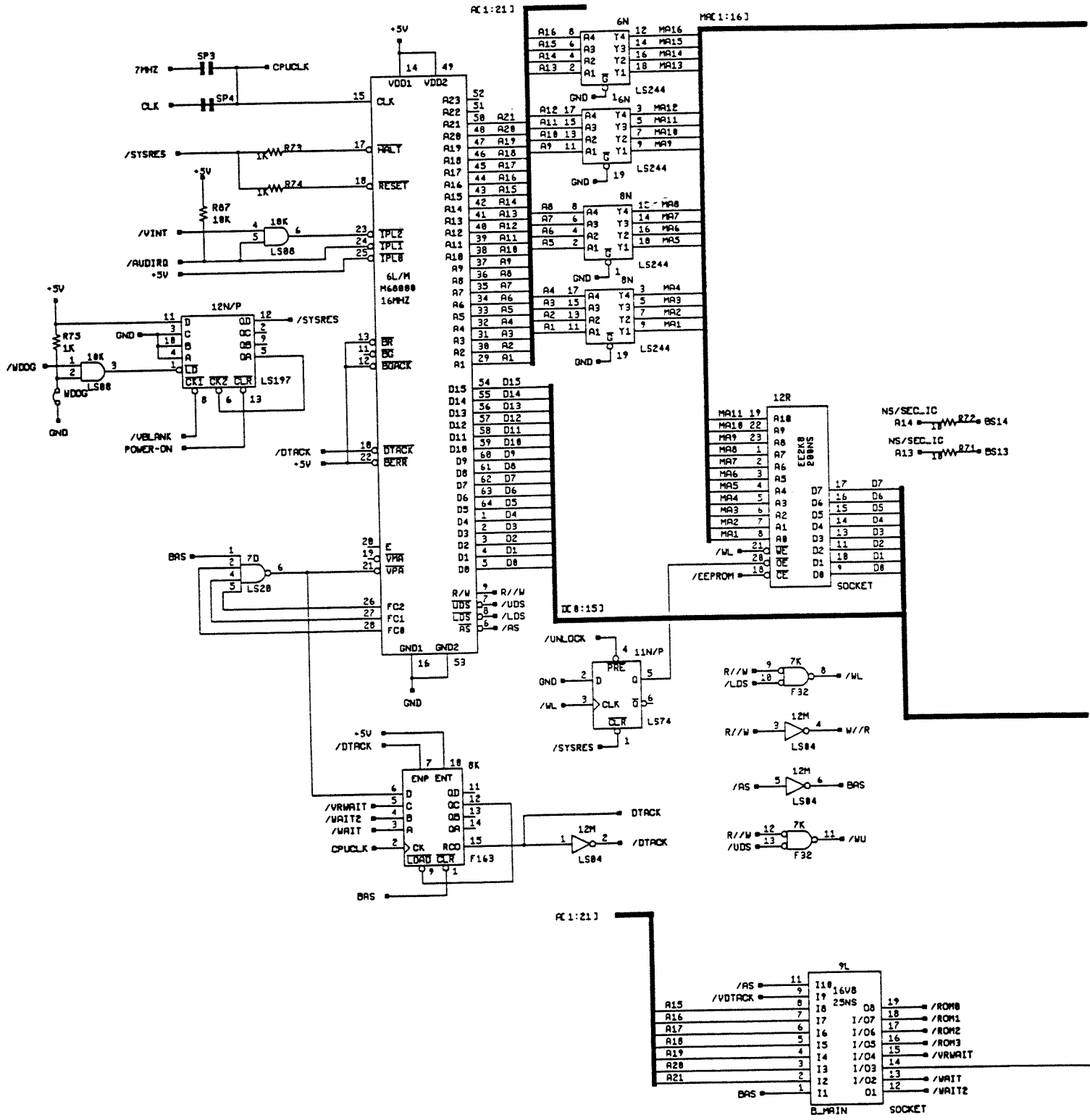
A[1:21]
MA[1:16]
6N
LS244
8N
LS244
LS244
LS244
+5V
7MHZ
SP3
CPUCLK
CLK
SP4
/SYSRES
R73
1K
R74
1K
R87
10K
/VINT
10K
LS08
/AUDIRQ
+5V
VDD1
VDD2
CLK
HALT
RESET
TPL2
TPL1
TPL0
6L/M
M68000
16MHZ
BR
BG
BGACK
DTACK
BERR
E
VMA
VPA
FC2
FC1
FC0
GND1
GND2
GND
12N/P
/SYSRES
R75
1K
GND
/WDOG
10K
LS08
WDOG
LS197
/VBLANK
POWER-ON
/DTACK
+5V
BAS
7D
LS20
R//W
/UDS
/LDS
/AS
D[8:15]
12R
EE2K8
200NS
SOCKET
NS/SEC_IC
A14
R72
BS14
NS/SEC_IC
A13
R71
BS13
/WL
/EEPROM
/UNLOCK
11N/P
PRE
LS74
/SYSRES
R//W
/LDS
7K
F32
/WL
R//W
12M
LS04
W//R
/AS
12M
LS04
BAS
R//W
/UDS
7K
F32
/WU
+5V
/DTACK
8K
ENP
ENT
/VRWAIT
/WAIT2
/WAIT
CPUCLK
LOAD
CLR
F163
BAS
DTACK
12M
LS04
/DTACK
A[1:21]
9L
16V8
25NS
/AS
/VDTACK
A15
A16
A17
A18
A19
A20
A21
BAS
B_MAIN
SOCKET
/ROM0
/ROM1
/ROM2
/ROM3
/VRWAIT
/WAIT
/WAIT2

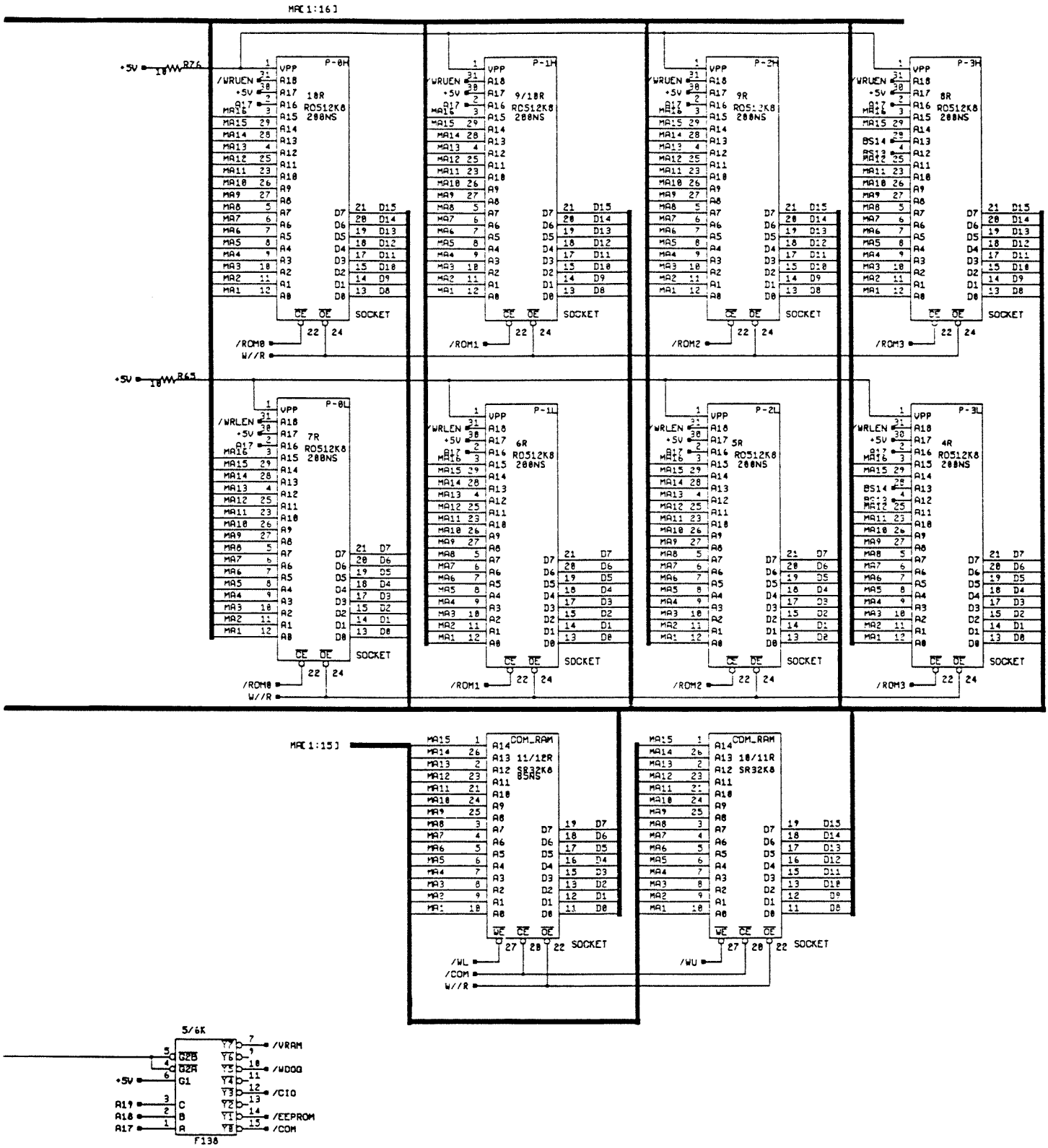

Figure 5-1 Batman Game PCB Assembly Schematic Diagram

048986-01 B

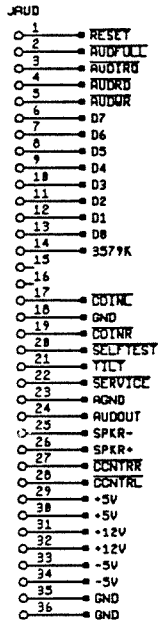

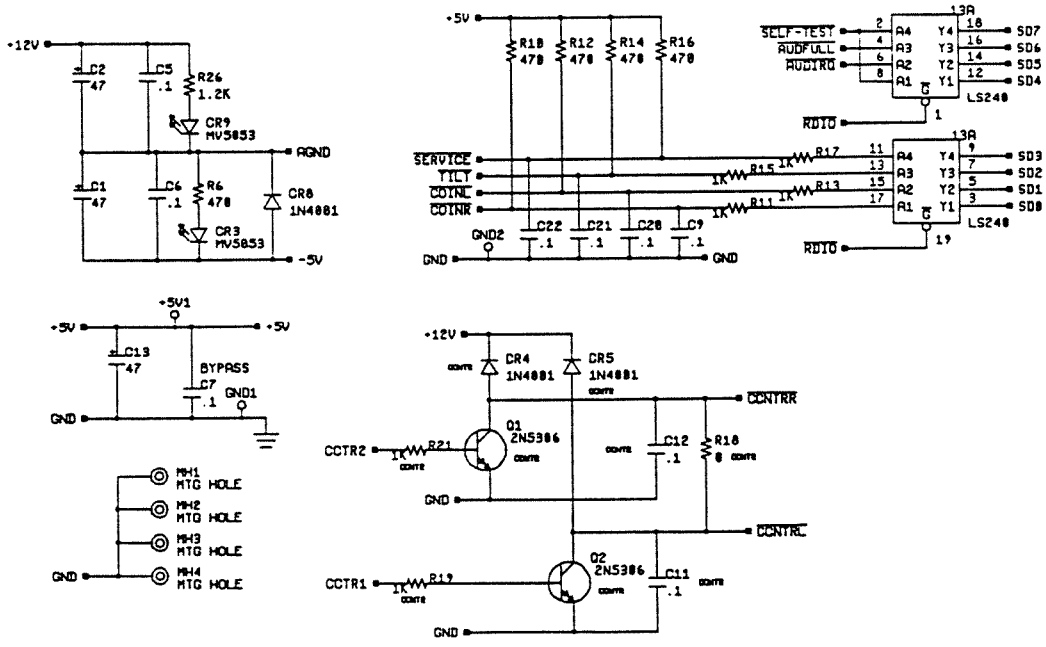

GND AND AGND TIED INTERNALLY NEAR MSM6295

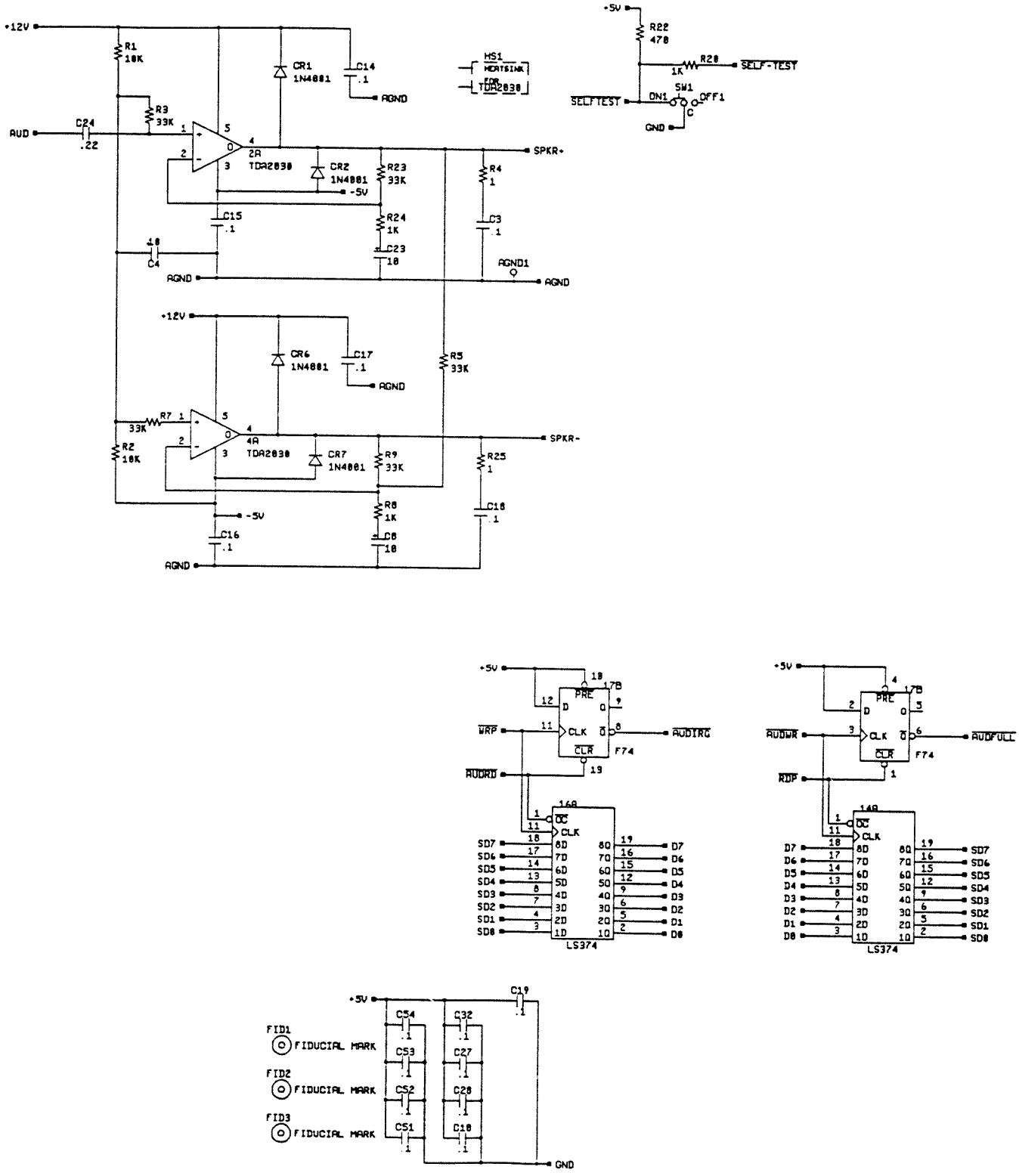

Figure 5-2 JSA III PCB Assembly Schematic Diagram

048973-01 A

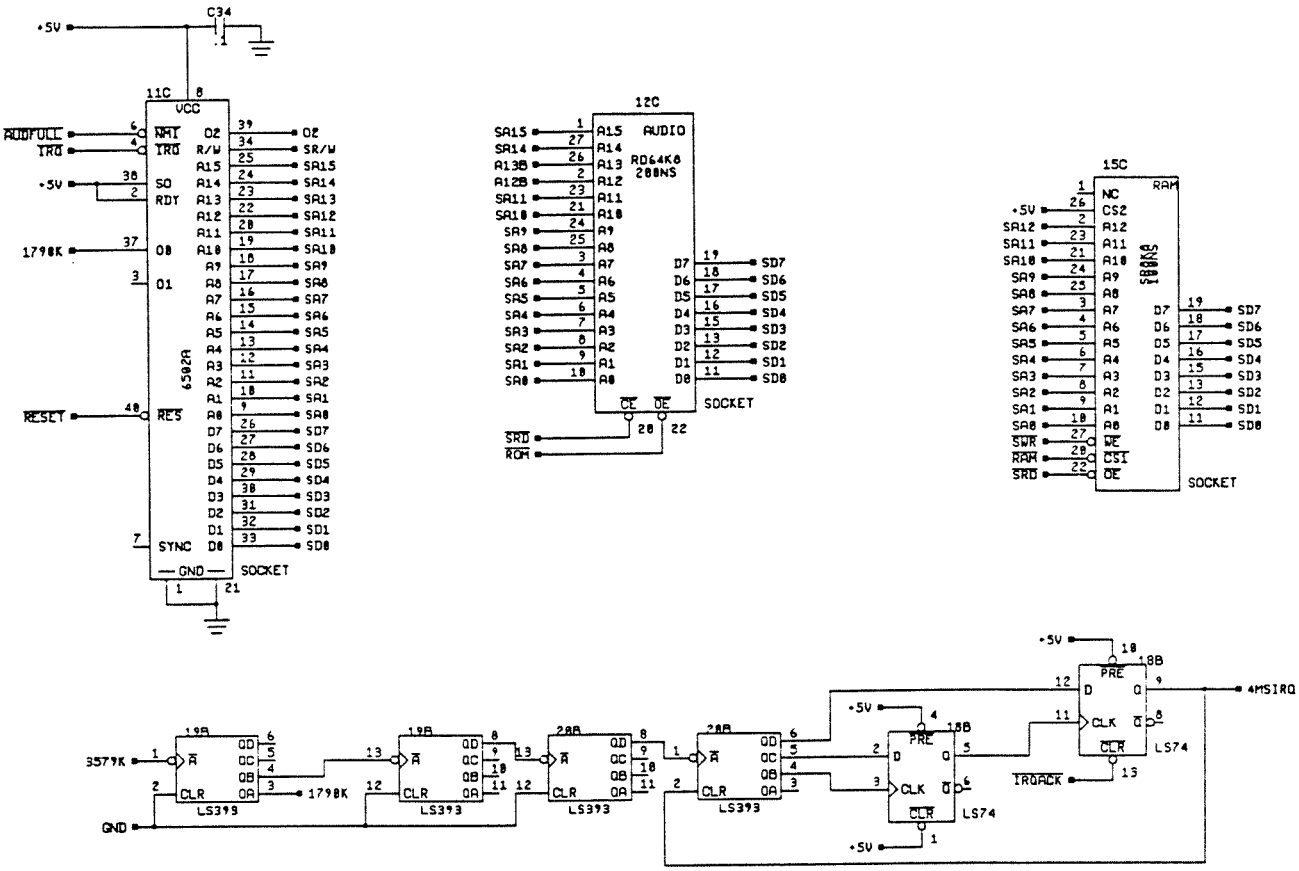
C34
+5V
11C
VCC
AUDFULL
IRQ
SO
RDY
1798K
O0
O1
RESET
RES
SYNC
GND
6502A
SOCKET
12C
AUDIO
RD64K8
200NS
SRD
ROM
15C
RAM
SWR
RAM
SRD
SOCKET
19B
20B
LS393
3579K
1798K
GND
18B
PRE
CLR
LS74
4MSIRQ
IRQACK

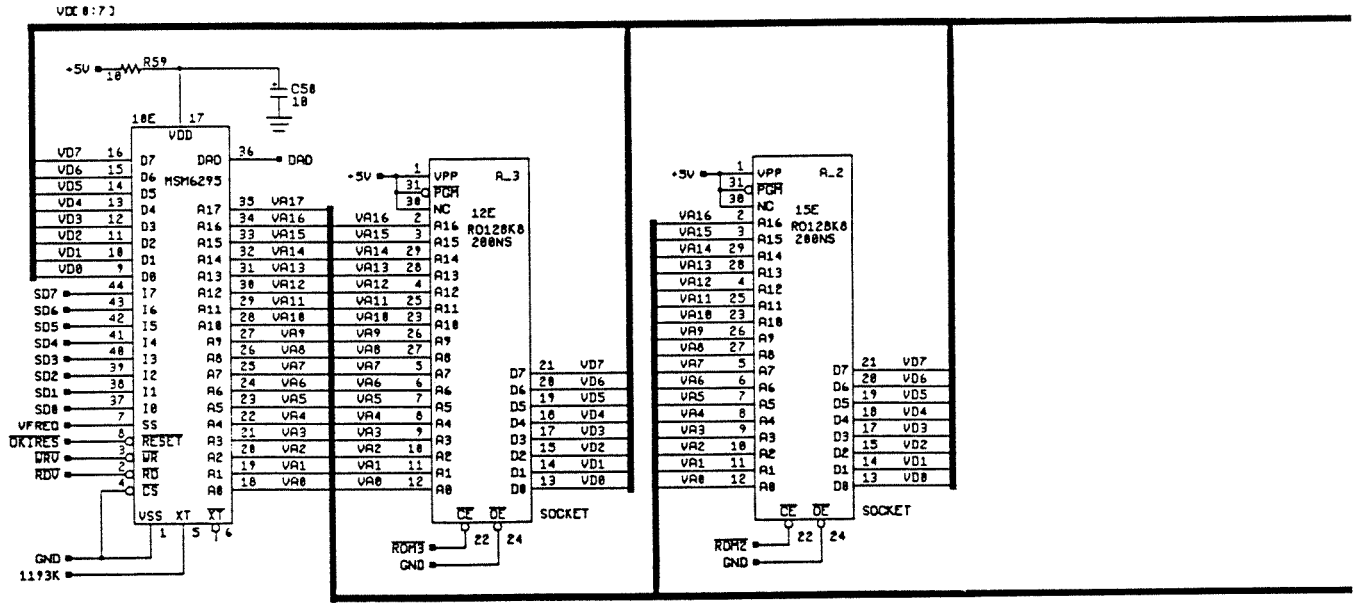
VDD[0:7]
R59
C58
10E
VDD
MSM6295
DAD
VFREQ
OKIRES
WRV
RDV
RESET
VSS
XT
GND
1193K
12E
RD128K8
200NS
ROM3
GND
15E
RD128K8
200NS
ROM2
GND
SOCKET

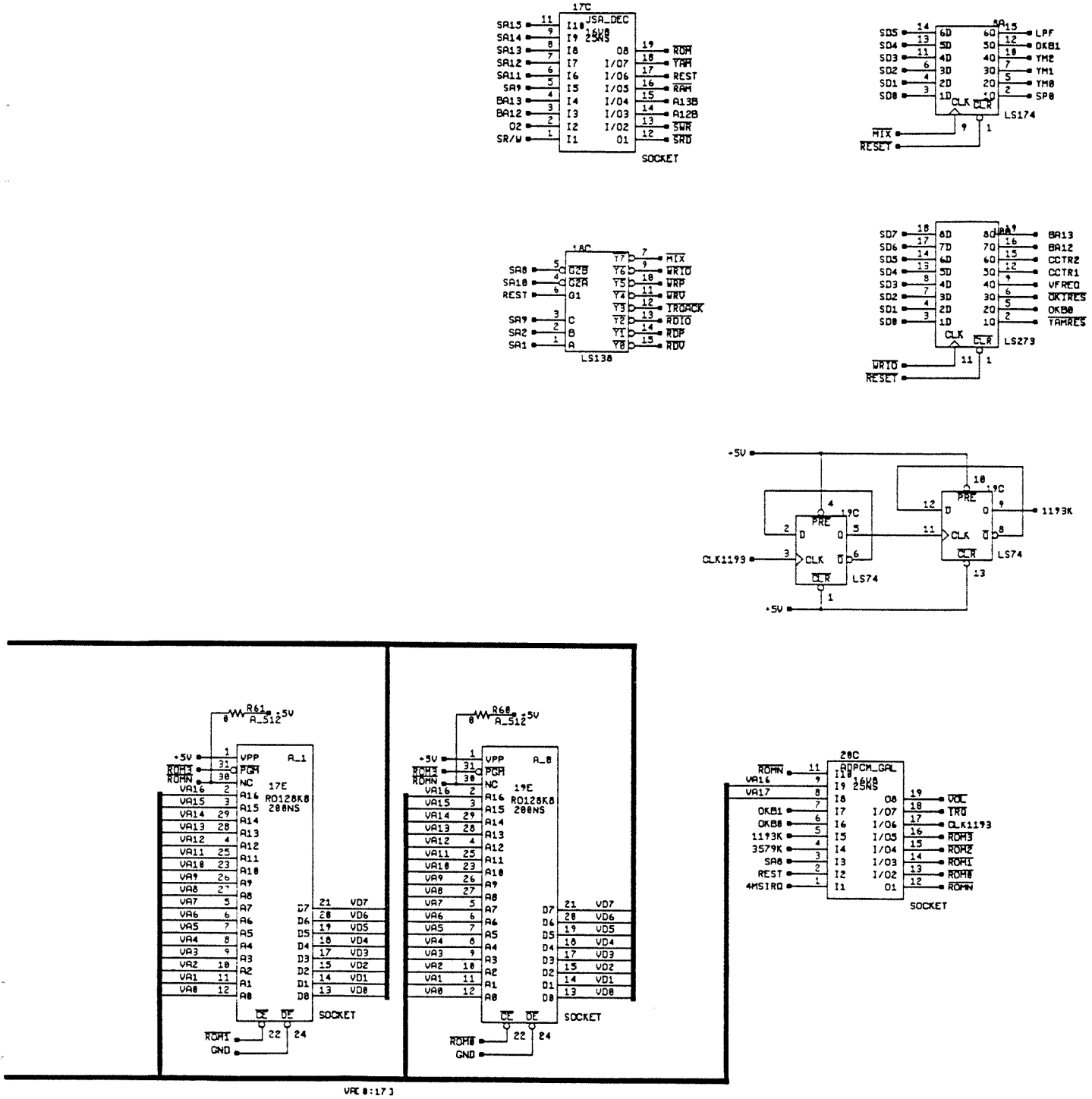

Figure 5-2 JSA III PCB Assembly Schematic Diagram

048973-01 A

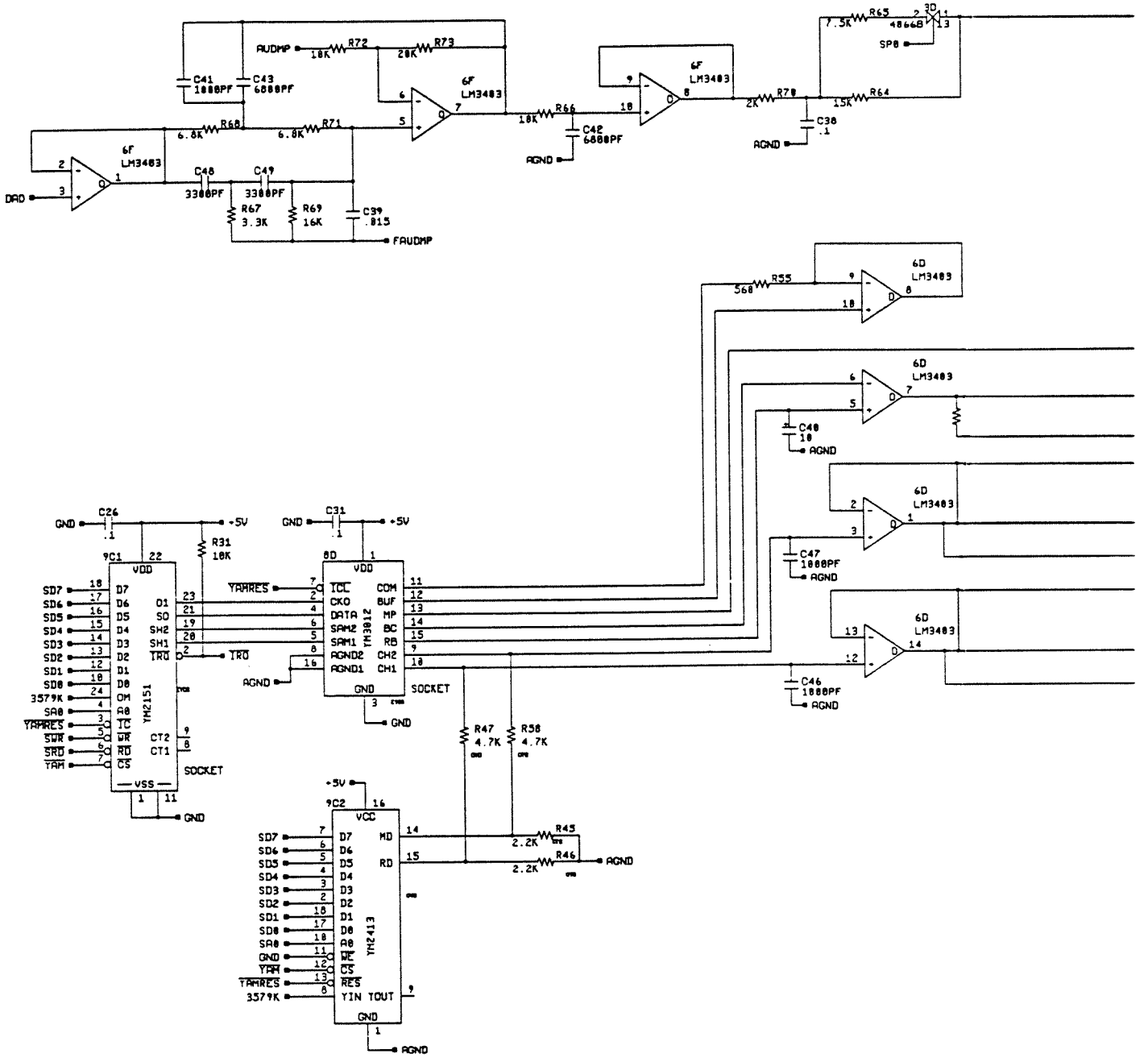
AUDMP
R72 10K
R73 20K
C41 1000PF
C43 6800PF
6F LM3403
R68 6.8K
R71 6.8K
R66 10K
C42 6800PF
AGND
R65 7.5K
3D 4066B
SP0
R70 2K
R64 15K
C38 .1
DAD
C48 3300PF
C49 3300PF
R67 3.3K
R69 16K
C39 .015
FAUDMP
R55 560
6D LM3403
C40 10
C26 .1
C31 .1
+5V
GND
R31 10K
9C1
8D
VDD
YM2151
YM3012
SD7
SD6
SD5
SD4
SD3
SD2
SD1
SD0
3579K
SA0
YAMRES
SWR
SRD
YAM
TRO
SOCKET
TCC
CKO
DATA
SAM2
SAM1
AGND2
AGND1
COM
BUF
MP
BC
RB
CH2
CH1
C47 1000PF
C46 1000PF
R47 4.7K
R58 4.7K
9C2
YM2413
MD
RD
R45 2.2K
R46 2.2K
YIN
TOUT
RES
CS
WR
RD

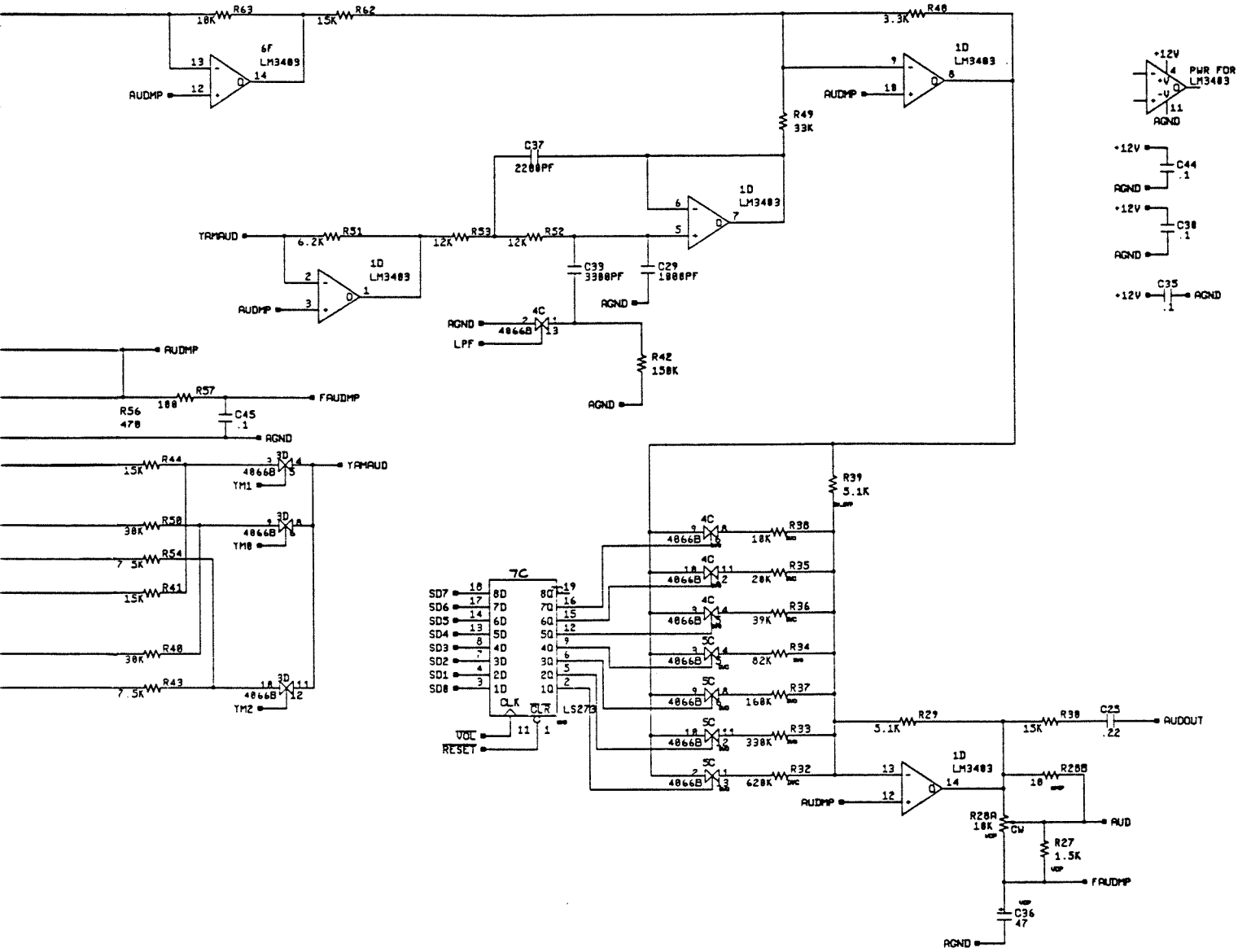

Figure 5-2 JSA III PCB Assembly Schematic Diagram

048973-01 A

NOTES

ATARI GAMES

Batman™ Statistics Sheet

Date Recorded: _____ Location: _____

Meter: _____

Statistics Screen

Left Coins:	_____
Right Coins:	_____
Auxiliary Coins:	_____
1-Credit New Games:	_____
2-Credit New Games:	_____
1-Credit Continued Games:	_____
2-Credit Continued Games:	_____
Total Games:	_____
Idle Minutes:	_____
Played Minutes:	_____
Error Count:	_____

Total Coins: _____

TM & © 1990 DC Comics Inc.

For technical assistance:

If reading through this manual does not lead to solving your game maintenance or repair problem, call TELE-HELP® at one of these Atari Games Customer Service offices:

UNITED STATES

Atari Games Corporation
California Customer Service Office
737 Sycamore Drive
Milpitas, CA 95036-1110
Fax (408) 434-3945
Telex 5101007850
✆ **(408) 434-3950**

(Monday–Friday, 7:30 a.m.–4:00 p.m. Pacific time)

EUROPE

Atari Games Ireland Limited
European Customer Service Office
Tipperary Town, Ireland
Fax 062-51702
Telex 70665
✆ **062-52155**

(Monday–Friday, 9:00 a.m.–5:30 p.m. GMT)

ATARI®
GAMES

®

Atari Games Corporation
675 Sycamore Drive
P.O. Box 361110
Milpitas, CA 95036

BATMAN and all related characters, slogans, vehicles, accessories and indicia are trademarks of DC Comics Inc. © 1991