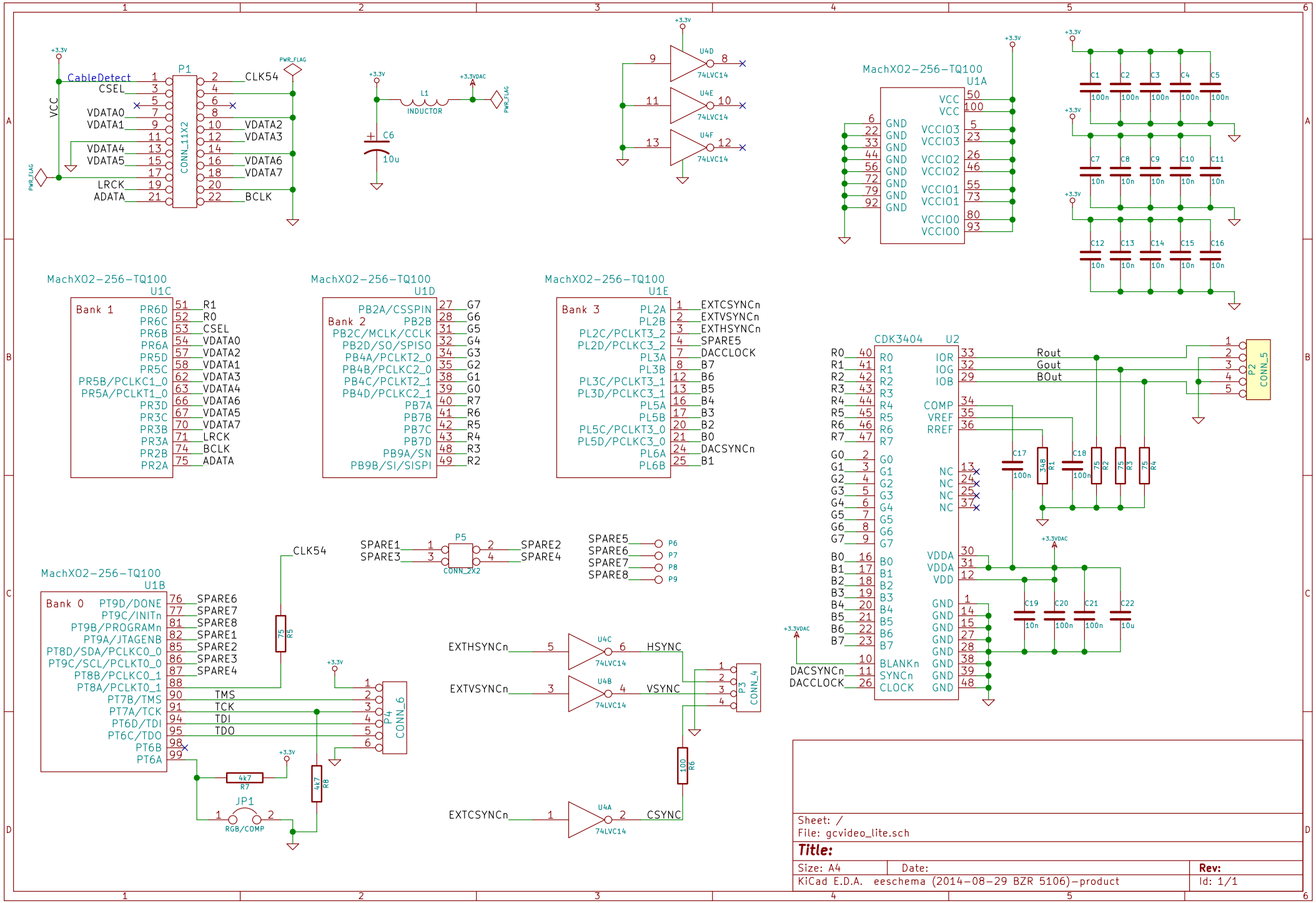

Sheet: /
File: gcvideo_lite.sch

Title:

Size: A4	Date:	Rev:
KiCad E.D.A. eeschema (2014-08-29 BZR 5106)-product		Id: 1/1